DESIGN OF A TRANSPORTABLE AMPLIFIER FOR ELECTRIC GUITAR

"THERE IS NOTHING FLAWLESS BUT THE EMOTION THAT MUSIC EVOKE OVER US."

Vinicio Raúl Chaluisa Vaca
UPV – EPSA

TUTOR: Joaquín Pérez Fuster (EPSA)

EXTERNAL TUTOR: Jan Stolin (TUL)

Content

DESIGN SPECIFICATIONS

BRIEFING

Definition of the project

Design a combo-type electric guitar amplifier and the brand name.

Background of the project

Being a project draft to enter the amplifier market, there is no background on the previous products.

Objectives of the project

Reasons of development

- Release a new amplifier concept
- Achieve a good placement in the market
- Improve functionalities
- Improve aesthetics parts
- Adaptability to the user

Brand name – value concept

Constant evolution between musician-amplifier, functionality and versatility.

Specifications

Functions

The design of the amplifier is initially conditioned by the following characteristics:

- Easy transportation of every component
- Modular composition (electronics)
- Dynamic aesthetic
- Easy reparation o replacement of components

Brand name

It should transmit the main values and complement the functionalities of the product. Also, the after-sale service must stand out over the market competition.

Normative

The product must comply with current regulations at European level, since its initial distribution will focus on this territory, so the following will be considered:

- Waste management: electrical components
- Raw materials of fair trade or certified origin
- Non-toxic product
- Mechanical tests
- Energy efficiency
- Use of standardized elements
- Product warranty

Materials and productive processes

Materials:

Main material: wood

Structural material: metal

Other components: plastic

At this point it is only possible make a supposition about the materials, after finishing the market analysis the right materials will be chosen.

Productive processes

The development of the product will be carried out in a workshop with the appropriate equipment for the materials to be used.

Market placement

With this type of amplifier, it is intended to position itself in the market as a reference to be considered by a new user in the world of music. So that the first investment in a new equipment can be easily amortized throughout his career as a musician, offering:

- Reliability
- Versatility
- Customizable
- Product quality

Market targets

Before to proceed to analyse the products on the market, we must define the primary and secondary target to lead the way and avoid possible mistakes in the design's priorities, consequently it will help to reduce the time noticeably.

Primary target:

People who have decided to enter the world of music and seek an equipment that suits their needs, this equipment must be economically attractive and, in order, offer the possibility of evolving the sound quality based on the experience gained by the user.

Secondary target:

Being a versatile product, it can be adapted to the most demanding musicians in terms of sound quality without losing the design that defines its personality, based on musical taste, and the good relationship it offers in quality-price.

Based on the data collected from the market target, we can generate charts and tables to compare all the results between the targets itself, and our perception of the market. Easily, we can see which features the project will focus on.

FEATURES	PRICE	POWER	SOUND QUALITY	FUNCTIONS	DESIGN	MATERIALS	DIMENSIONS	WEIGHT
PRIORITY (BEGINNER LEVEL)	8	4	6	7	5	2	1	3
PRIORITY (PRO LEVEL)	6	5	8	7	4	3	1	2

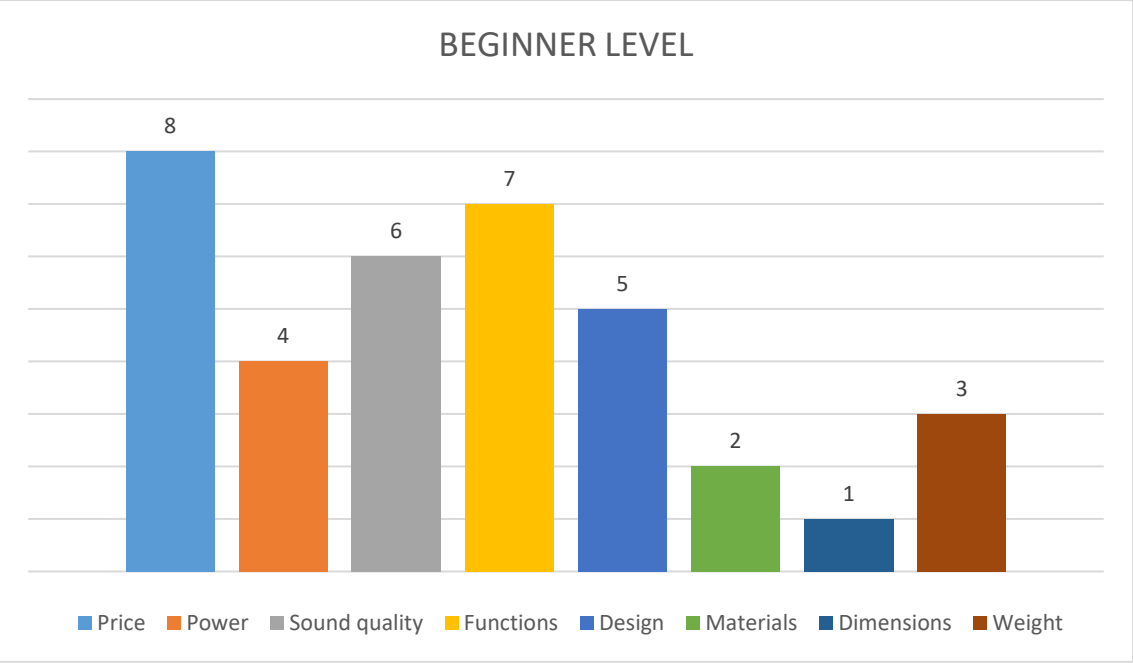

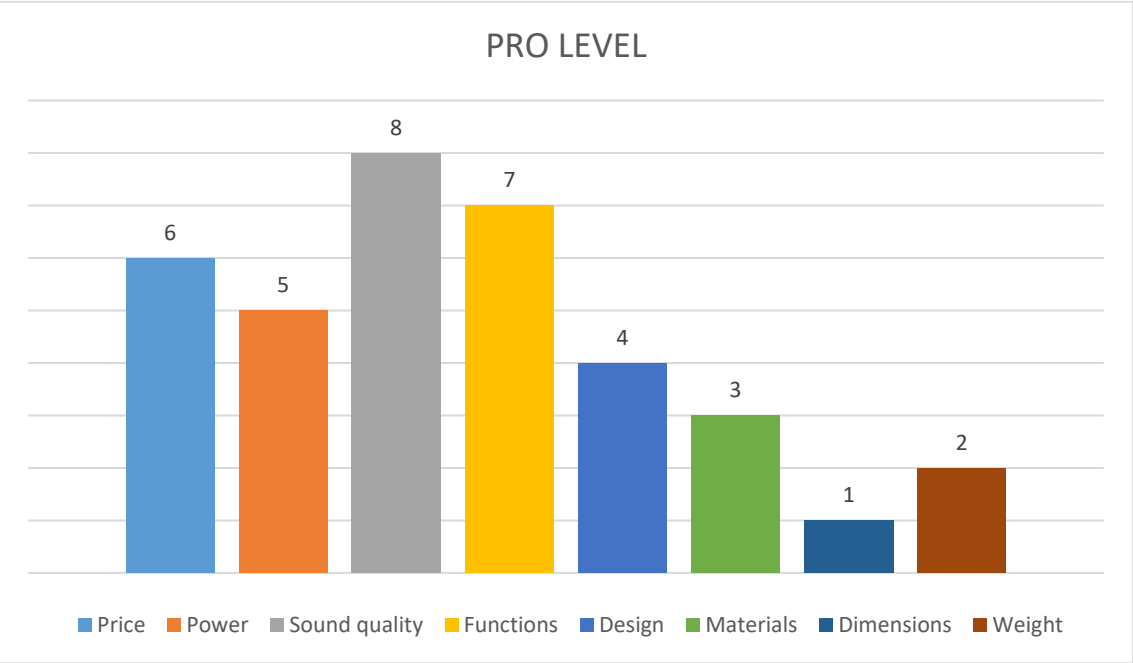

As conclusion, the differences between the two levels are not so far from each other, that means it will be less difficult to satisfy both. Therefore, we have to take care mostly about the price, sound quality and functions to avoid any kind of disappointing on the consumer.

After examining every detail of the briefing's points, the next step is to develop a market analysis to find out the most common features of this kind of amplifiers to apply on this project. So, we will focus on the power, speaker (quantity and size), dimensions, weight and price. Moreover, the functions, materials, extra components and the positions of the controller's knobs are included in this study.

MARKET ANALYSIS

Main features:

BRAND	FENDER
MODEL	Mustang I v2
POWER	20W
SPEAKER	1x12"
DIMENSIONS	368x400x193 mm
WEIGHT	7,7kg
PRICE	140€

BRAND	BLACKSTAR
MODEL	ID Core 40
POWER	40W (2x20W)
SPEAKER	2x6,5"
DIMENSIONS	434x336x185 mm
WEIGHT	6,2kg
PRICE	148€

BRAND	LINE6
MODEL	Spider IV 30
POWER	30W
SPEAKER	1x12"
DIMENSIONS	432x457x222 mm
WEIGHT	7,3kg
PRICE	148€

BRAND	VOX
MODEL	VX II
POWER	30W
SPEAKER	1x8”
DIMENSIONS	354x313x192 mm
WEIGHT	3,8kg
PRICE	135€

BRAND	BLACKSTAR
MODEL	ID 30
POWER	30W
SPEAKER	1x12”
DIMENSIONS	500x460x250 mm
WEIGHT	13kg
PRICE	347€

BRAND	VOX
MODEL	VT40X
POWER	40W
SPEAKER	1x10”
DIMENSIONS	462x404x225 mm
WEIGHT	9,5kg
PRICE	249€

BRAND	LINE6
MODEL	Spider V 60
POWER	60W
SPEAKER	1x10”
DIMENSIONS	442x429x231 mm
WEIGHT	11kg
PRICE	325€

Once the market analysis is finished, we can collect the results to generate a table to summarise all the basic features that should have our product.

FEATURE	MINIMUM	MAXIMUM	RECOMMENDED (APROX.)
PRICE (€)	135	347	250
POWER (W)	20	60	40
SPEAKER (INCHES)	8”	12”	12”
DIMENSIONS (mm)	354x313x192	500x460x250	400x400x200
WEIGHT (kg)	3,8	13	10

Materials

The main material used for these products is wood, but it is not the same wood used for every cabin, so we consider make a short study about the most common kind of woods used and their properties.

WOOD	VALUE	SOUND QUALITY	RESISTANCE	CRAFTING
BIRCH	High	Very good	Good	Good
PINE	Low	Average	Average	Good
MDF	Low	Average	Good	Good
CEDAR	Medium	Good	Good	Good
MAHOGANY	Medium	Good	Good	Good

As we can see in the table, the mahogany seems to be the best choice because of its properties, also the MDF but the price cannot compensate the lack of the sound quality that offers the mahogany. Even though, we can contemplate use the MDF to create a cheaper line of products if it is necessary.

Furthermore, there are other materials used in several components of the amplifier such as the knobs, plate of the controller, screen, etc. in these cases the plastic with different finished, based on the function (aesthetic or non-aesthetic).

In the corresponding annex will be show the data sheet of every material that took part in the study.

The next step of the market analysis is focused in the layout of the controllers and how the user can interact with the product. The process will be the same as before, first the controllers and their functions will be show, then the common features will be collected in a table and finally we will be able to project a first draft base on the results.

Layout of the controllers:

Fender Mustang I v2

Blackstar ID Core 40

Blackstar ID 30

Vox VX II

Vox VT40X

Line 6 Spider IV 30

Line 6 Spider V 60

Once we have seen different controller's layout, we can proceed to elaborate a list about the common characteristics and components to lead the project in the right way. Consequently, we will focus this study on several points: number of knobs and their functions, inputs and outputs ports, additional features, graphic design and materials.

Do not forget that one of the **requirements** for the design is based on the **modular composition** of the electronics and the best way to achieve that is offer the possibility to change the electronics at any time, that means the user can upgrade the of the amplifier without buying the whole amplifier.

That opens a lot of possible combinations in the layout, but in this project, we will put effort to develop the best design for our primary target: a beginner in the world of music.

Now, we can continue with the list:

Knobs

- Master/Chanel volume
- Drive
- Treble
- Mid
- Bass
- Amp selector
- Effects selector

Buttons

- Power on/off
- Pre-set selector
- Tuner
- Channel selector
- Amp selector

Ports

- Inputs:
    - Guitar
    - Aux
    - Footswitch
    - USB
- Outputs:
    - Headphones

Additional features

- Display and dedicated buttons to navigate into the menu

Some amplifiers may have ports (footswitch, aux or headphones) in the back. So, at this point, we can set different control panels for:

Beginners: all knobs listed, tuner, guitar input and headphones output.

Advanced: all knobs, buttons and ports listed.

Pro: all the items listed plus a display to use the amplifier as an audio interface allowing a deep control over the sound modulating.

We finished the market analysis, that means we can start to make some concept design based on the data collected until now. Then the next step is draw a preliminary design to establish a start point to the right development of the project.

Preliminary design

Sketches – Head and cabin

The head of the amplifier will be detachable to be able to save it in the back of the speaker's cabin.

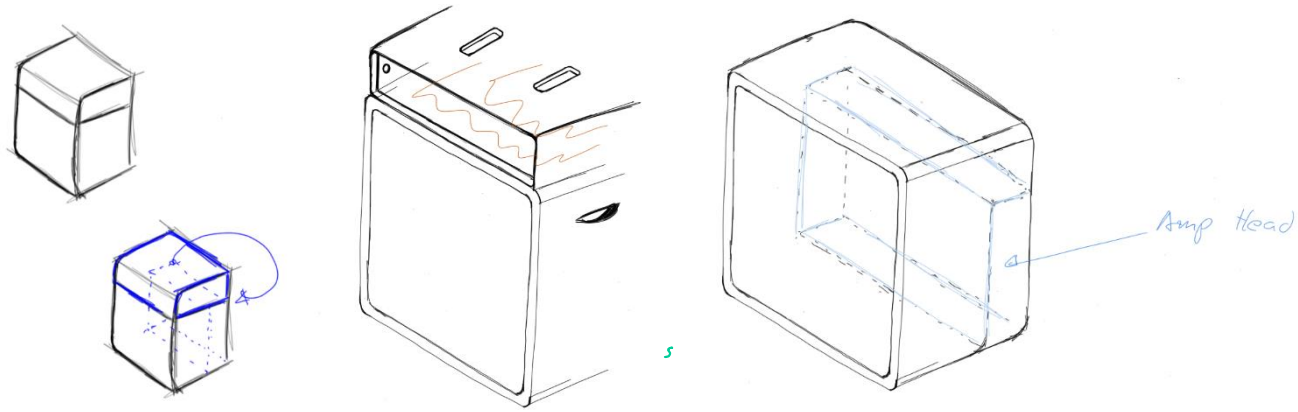

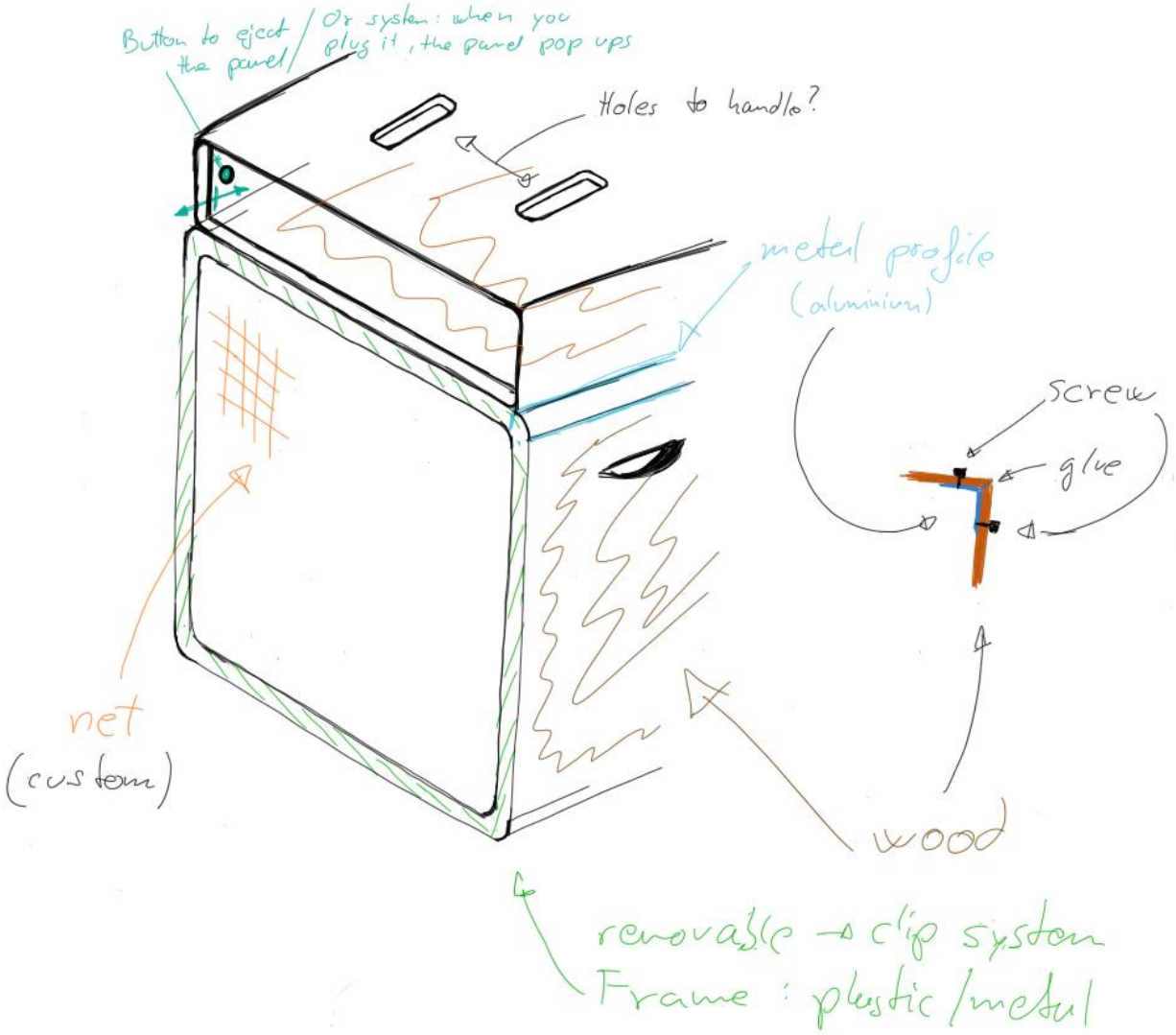

First draft

To make a stand out design, we must get rid of the conventional straight box-shape and apply for more organic shapes. In that way, the user will be able to recognise our product at first sight.

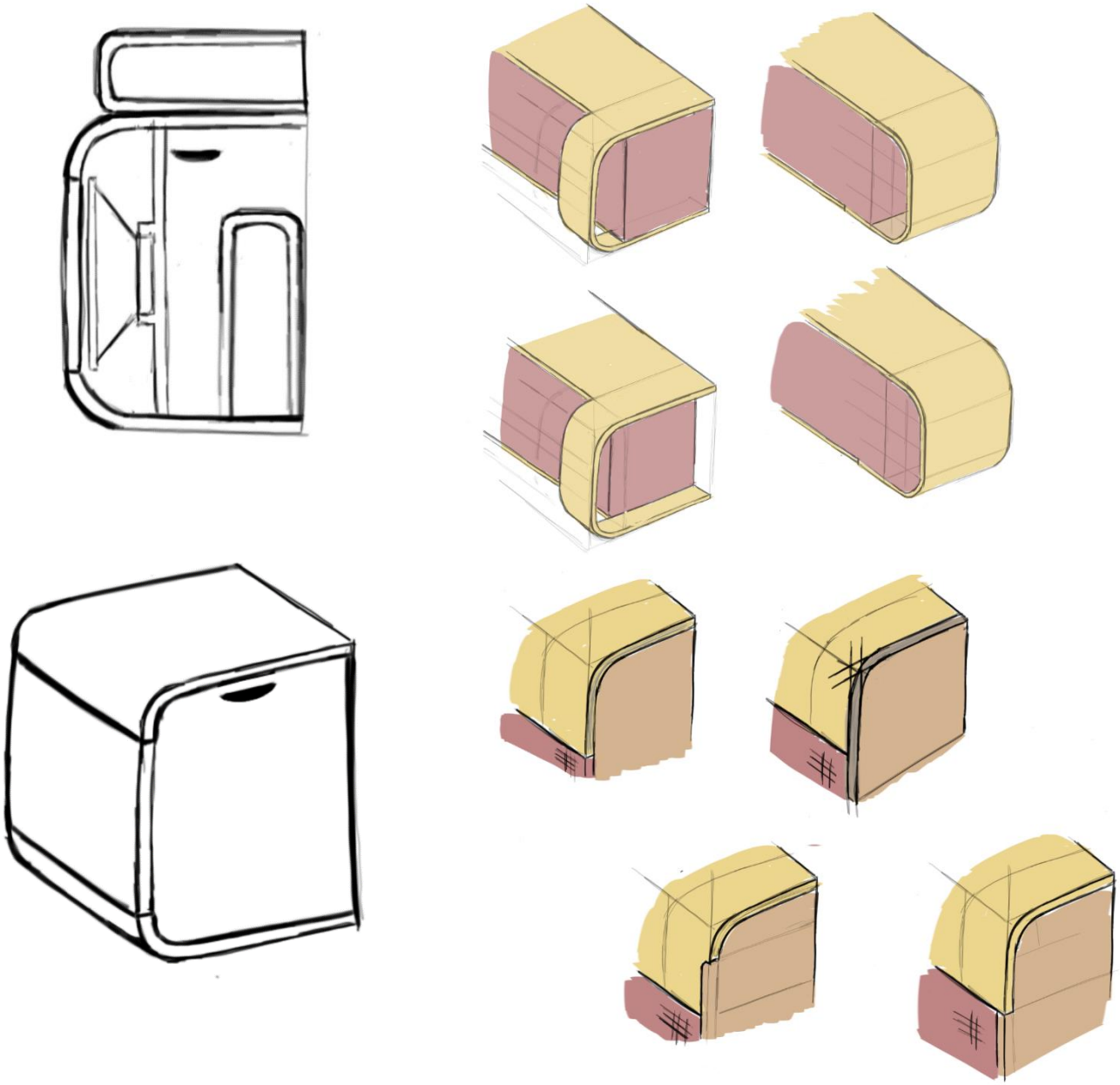

Sketches – Control panel

Now it is time to focus on the control panel, all the knobs and functions that the user will interact with.

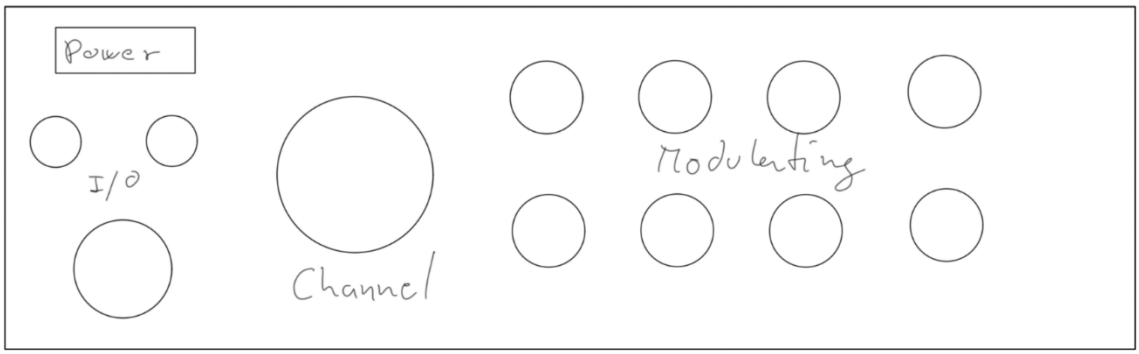

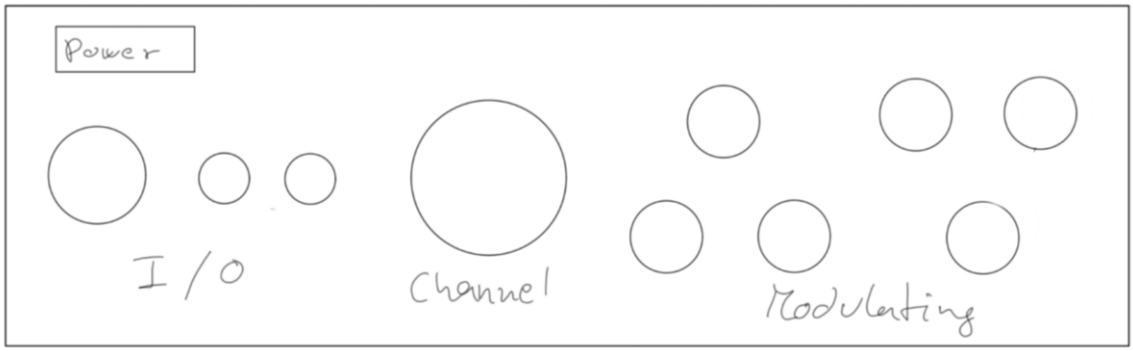

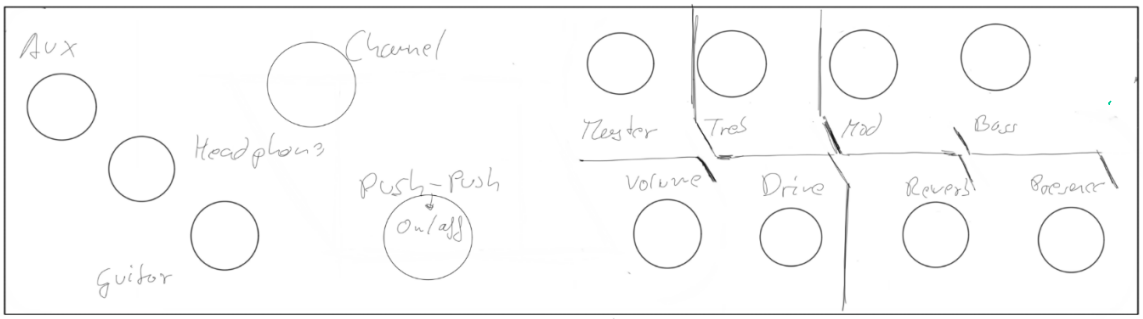

As we did in the shape of the cabin, we must present the layout of the control panel as something to highlight. Therefore, the third option seems to do the job perfectly, with the appropriate graphic design, because has an unusual distribution of the controllers and more functions than the second one.

At this moment it is time to do the final concept of the control panel. All the functions available will be shown through the picture.

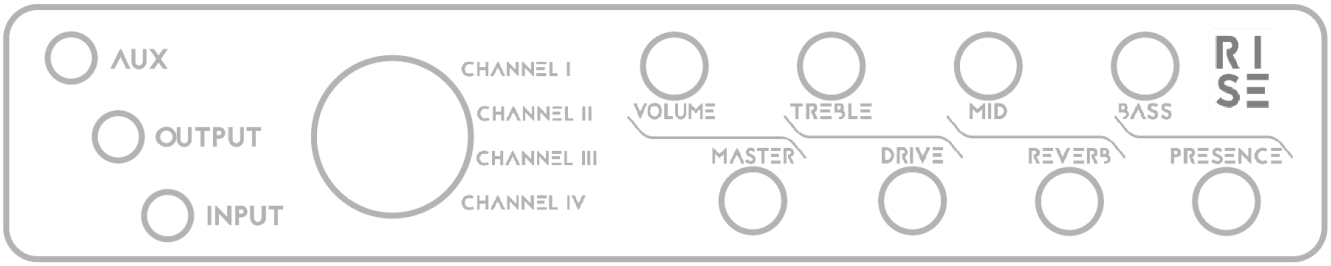

Knobs

There are nine knobs, eight of them for the sound modulating and one to select the channel.

Buttons

The big one has more functions based on the action:

- Hold pushed to power on/off
- Push once in any channel to save the sound configuration
- Push twice for tuner

Ports

There are three main ports: input (guitar), output and aux

Final concept

At last, the previous sketches helped to achieve the final one where most of the needed features are present in the design.

The body will be made of glued plancks of mahogany, painted in white for the laterals and reddish brown for the rest. The knobs will be made of ABS obtained by injection mould. The structural part will be made of aluminium alloy.

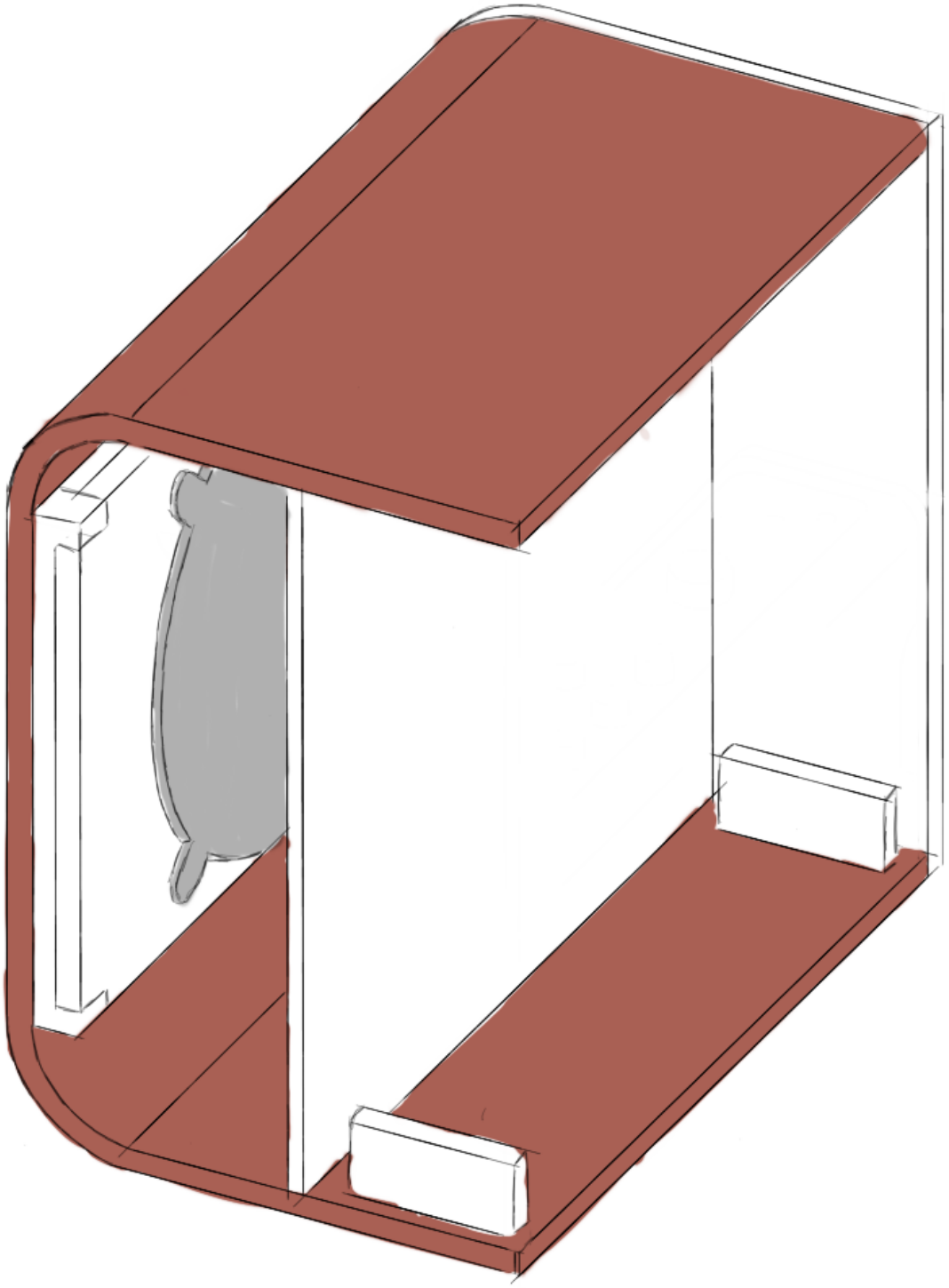

The design allows to remove any part of the amplifier with the right tool, that ease the maintenance, reparations, exchange of the components to upgrade as the user wish and the customization. For example, we can make different combinations of colours that the customer can choose.

The join system will be explained in the specific upcoming point.

Graphic design

The product must be easy to recognise, besides the shape, the properly use of a logotype and the typography will help to achieve this goal.

Brand name's background

"Rise: to become stirred in the emotions"

In this case, we take on of the many definitions of the word 'RISE' to evoke one of the consequences when we listen to music.

And finally, we get the following acronym: **R**evolt your **I**nner **S**ound **E**nergy

Font

The best way to create a visual impact is choose the correct font. First, we should do a research about fonts with different styles and choose the best one that can suit this product.

BRUSH SCRIPT MT – brush script mt

CENTURY GOTHIC – century gothic

CORNERSTONE - CORNERSTONE

ERAS MEDIUM ITC – eras medium itc

JAAPOKI SUBTRACT – jaapoki subtract

KOZUKA GOTHIC PRO – kozuka gothic pro

MAGNETO - magneto

ROCKWELL – rockwell

STENCIL – STENCIL

TAHOMA – tahoma

TW CENT MT – tw cent mt

VERDANA – verdana

YU GOTHIC MEDIUM – yu gothic medium

Therefore, the best option that suit this product is the font Jaapokki and its variant “subtract”.

JAAPOKKI SUBTRACT - Jaapokki Subtract

A B C D E F G H I J K L M N O P Q R S T U V W X Y Z

a b c d e f g h i j k l m n o p q r s t u v w x y z

0 1 2 3 4 5 6 7 8 9

This font is quite impressive because tries to run away from the typical representation of the letters, also add energy with straight shapes mix with a bit of minimalism.

Once the font has been chosen, it is time to build up the logotype and isotype. Following the style of the font, we should use simple geometric shapes and try to not overuse them.

About the colour, we will use the Pantone’s gull gray. But in the product could be present with different finished such as grey mate, polished, metallic, stained or even with texture over the components.

Colour values:

RGB: 167 161 167

HEX/HTML: A7A1A7

Lab: 67 3 -2

HSB: 300 4 65

CMYK: not available

We assume the difficulty to get the exact grey tone in the product, so we can expect to see a similar tone.

Logo design

Here is the result as a combination of the font and the brand name:

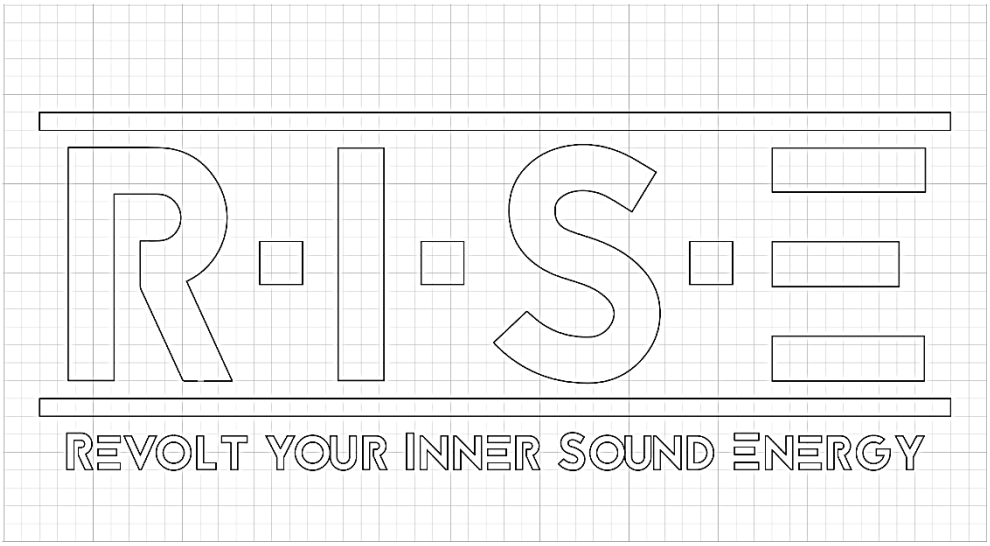

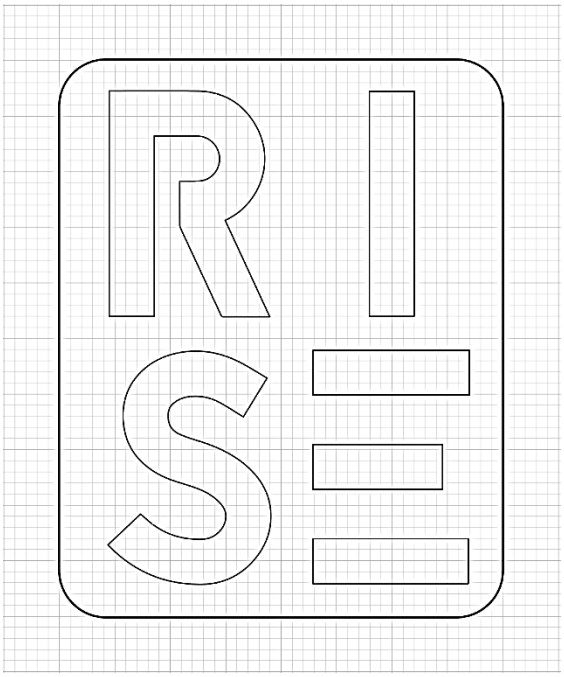

Final design

Render

Full combo


AUX
OUTPUT
INPUT

Full combo - back

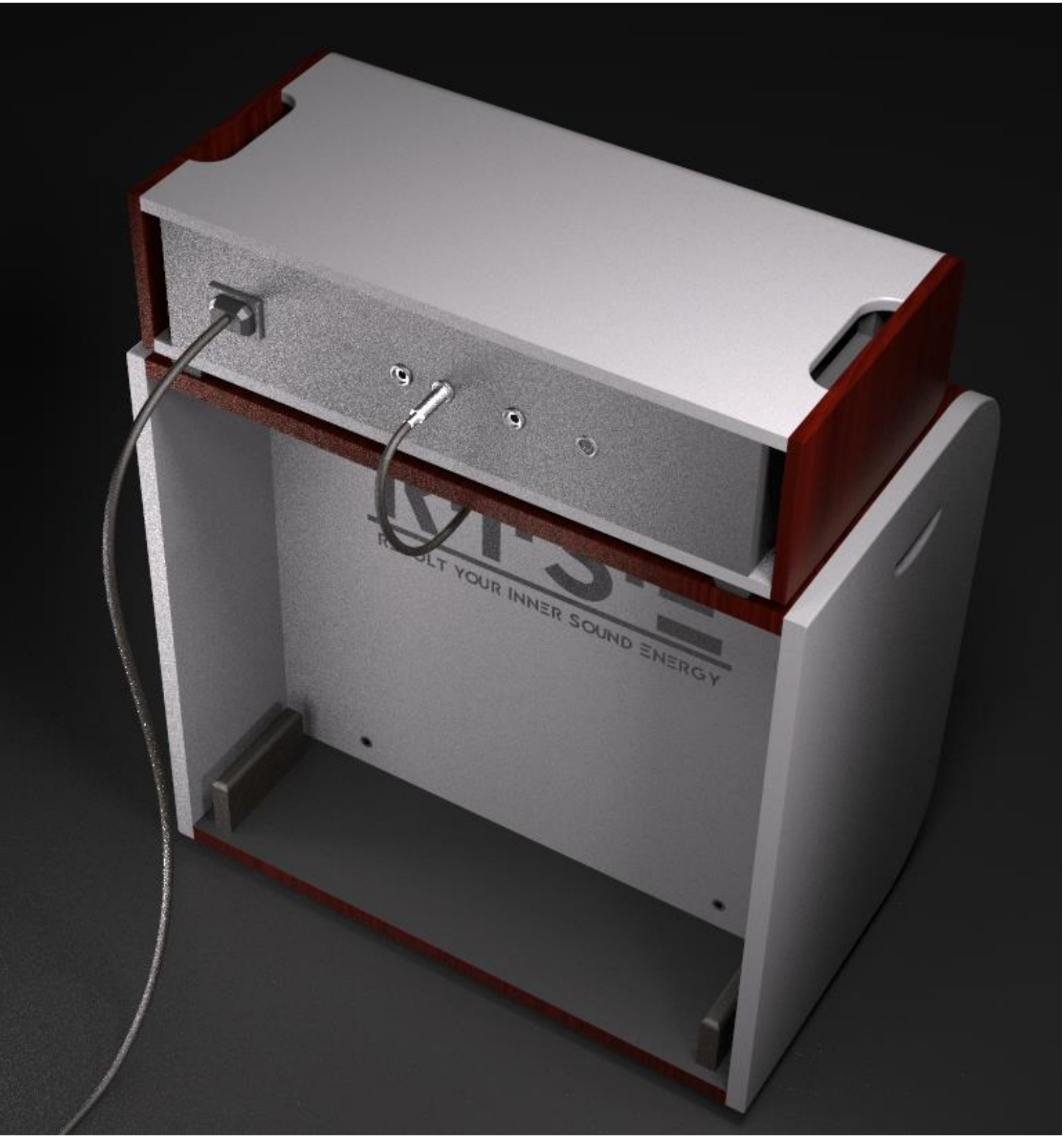


REVOLT YOUR INNER SOUND ENERGY

Cabin without the grid

Cabin without inner panel

Head cover

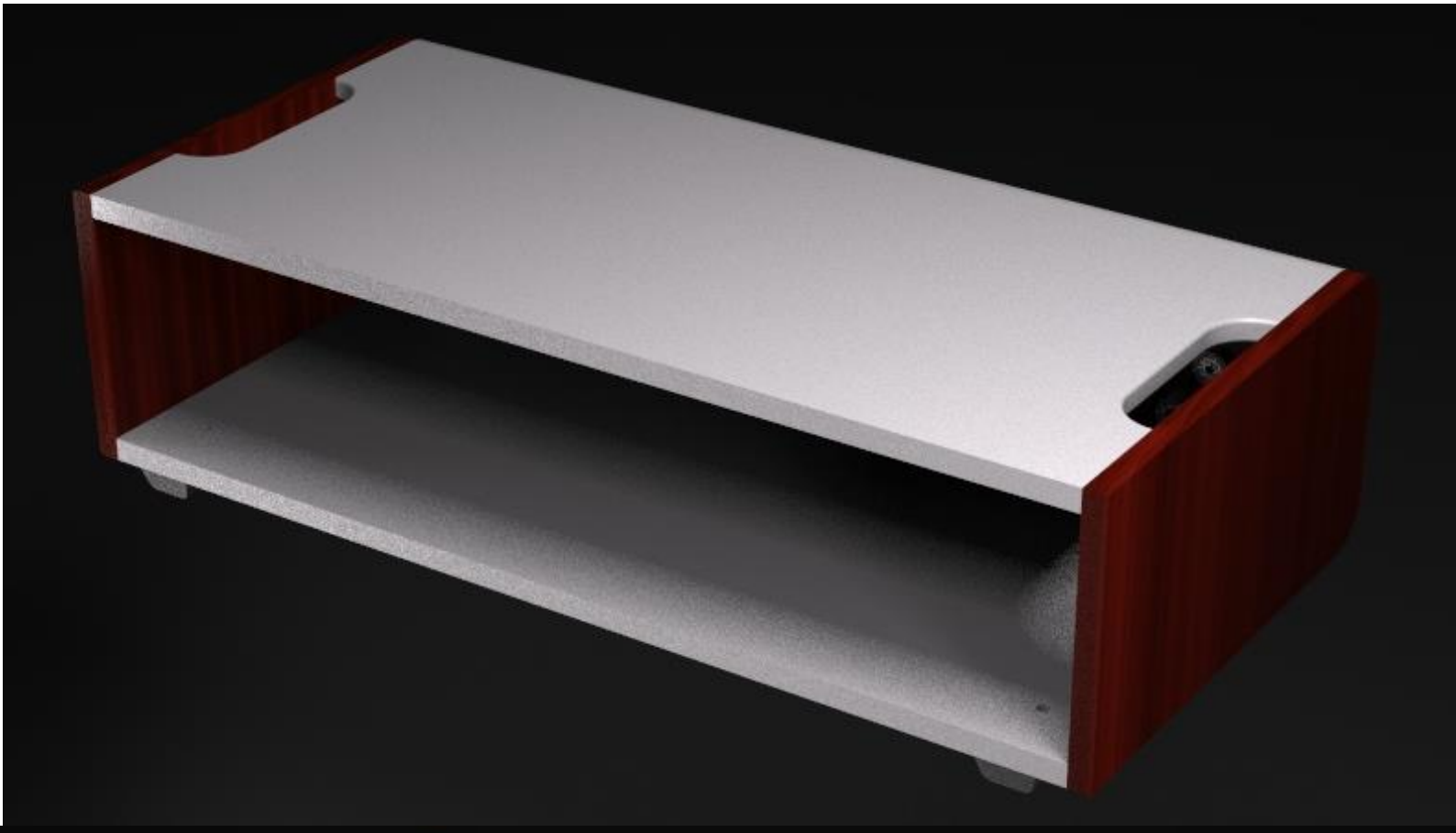

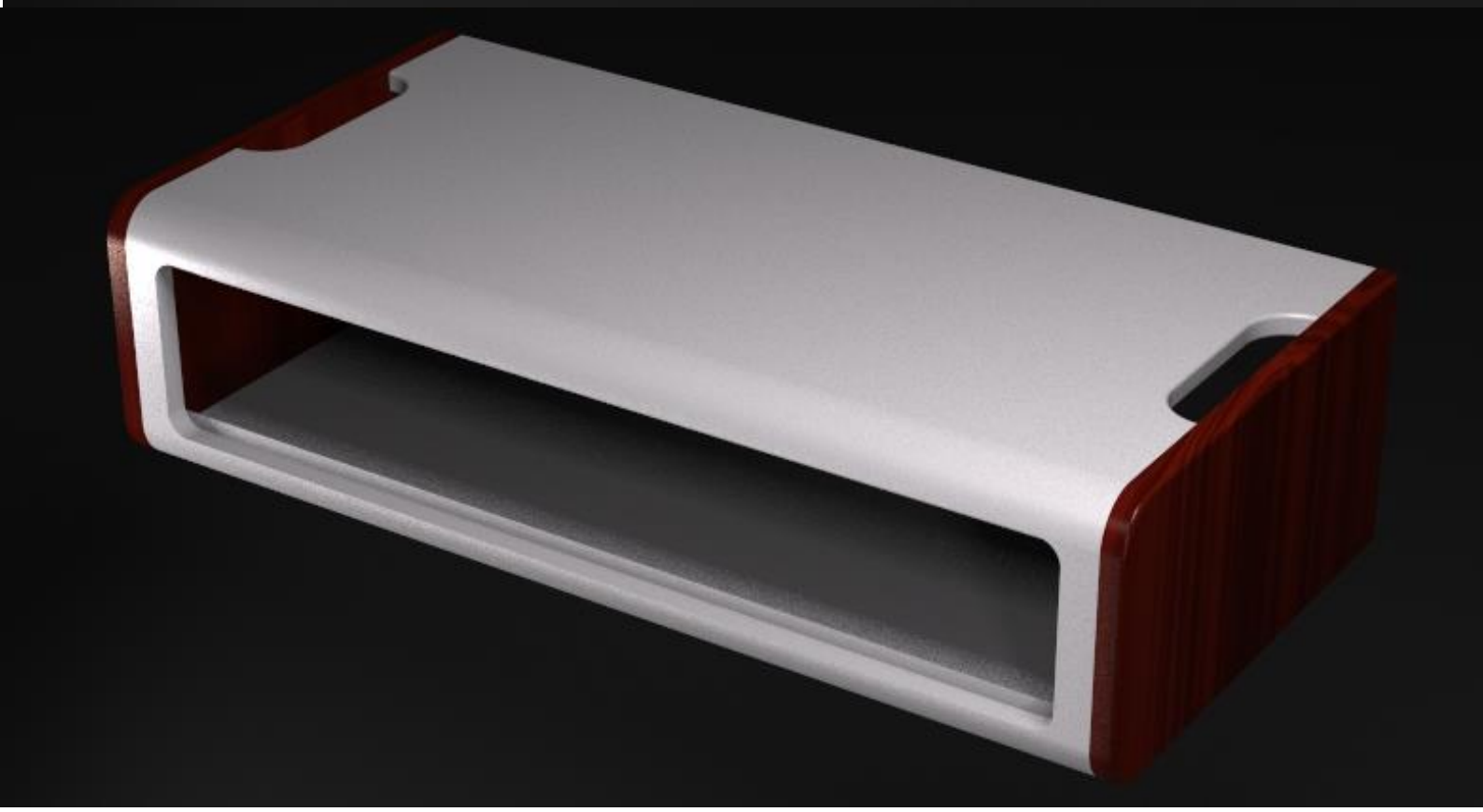

Blueprints

At this point, there will be represented the main dimensions of the head's cover and speaker's cabin:

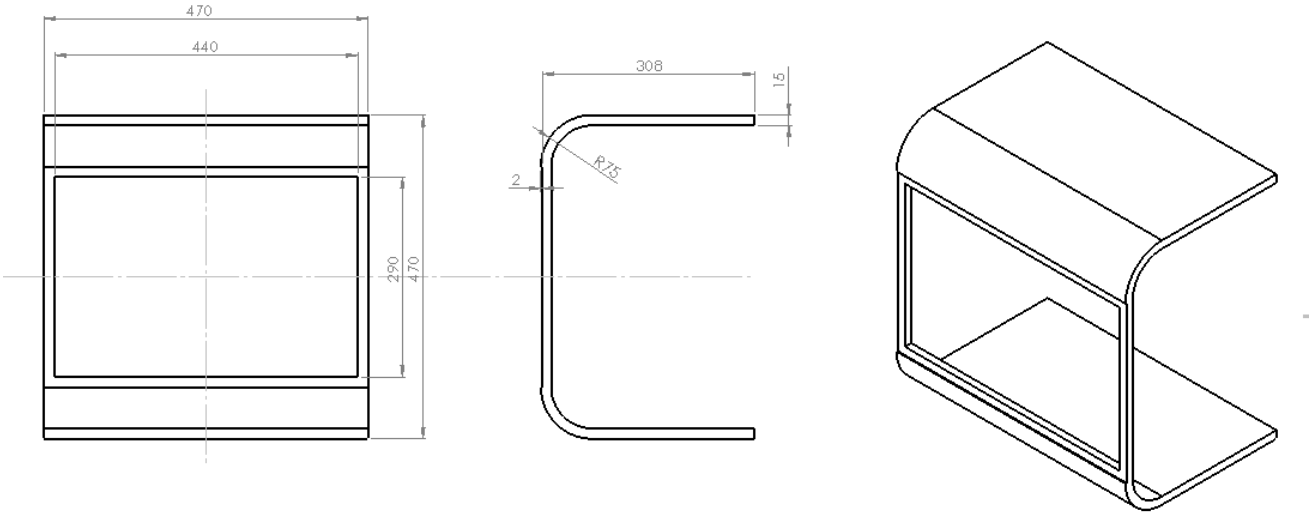

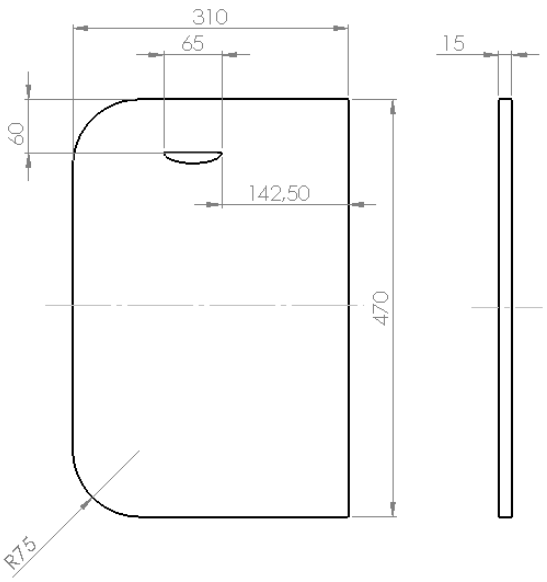

Dimensions of the bend wood of the cabin (upper image) and its side panel (bottom image).

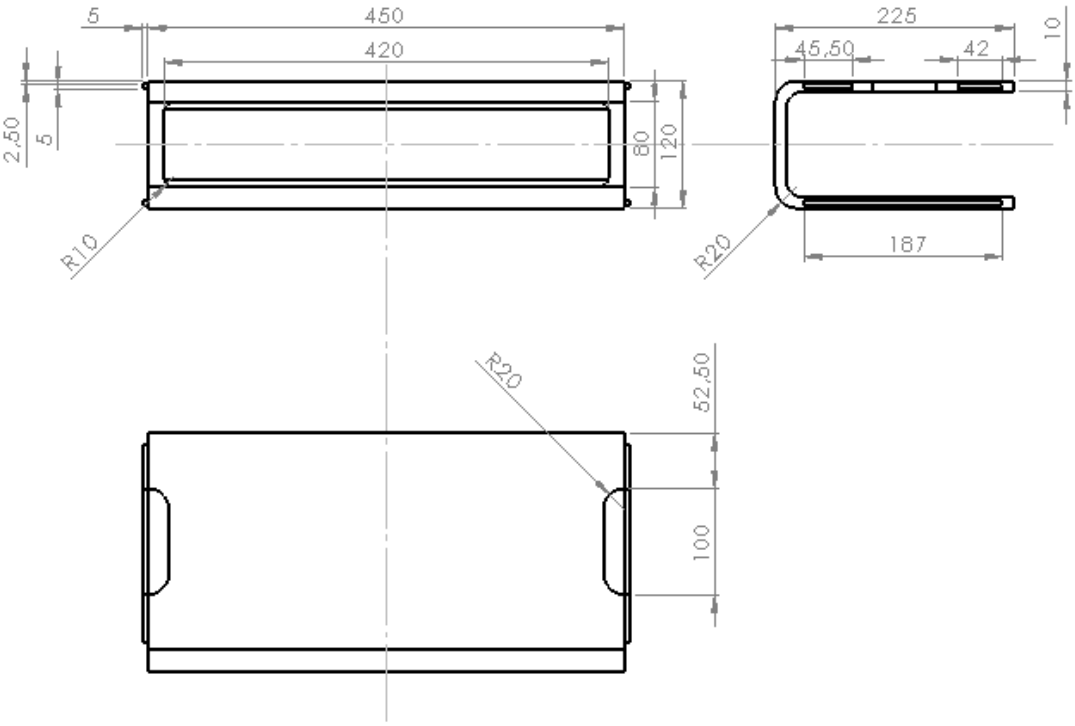

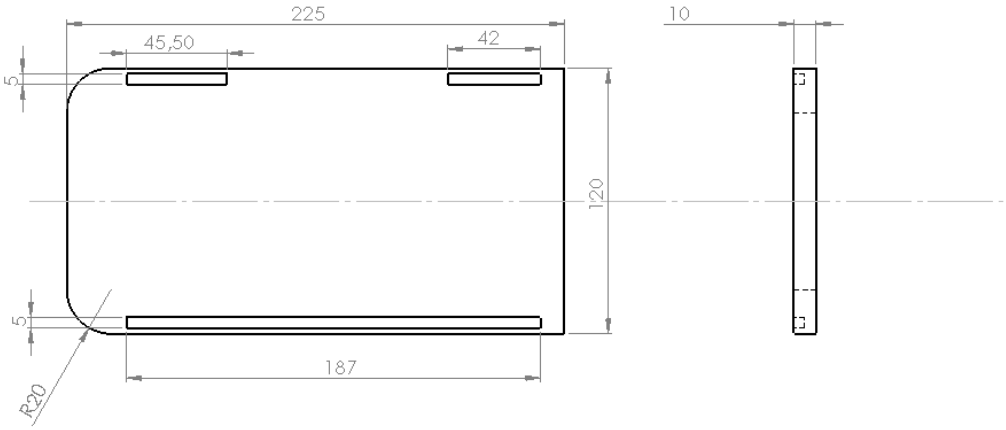

Dimensions of the bend wood of the head's cover (upper image) and its side panel (bottom image).

Join system

One of the most challenging situations is to develop a design which join system doesn't break the aesthetic part of the final product.

To achieve this goal, we will use different products, mainly epoxy wood glue and screws.

The epoxy glue is used in the wood case of the head to fix the bend wood with the sides. In the other hand we will use screws to attach the box, that contains the electronic module, with the case. These screws will be in the bottom of the case, through the supports.

About the cabin, we will use a special magnetic screw that allows to hide the drill holes.

More info at annex.

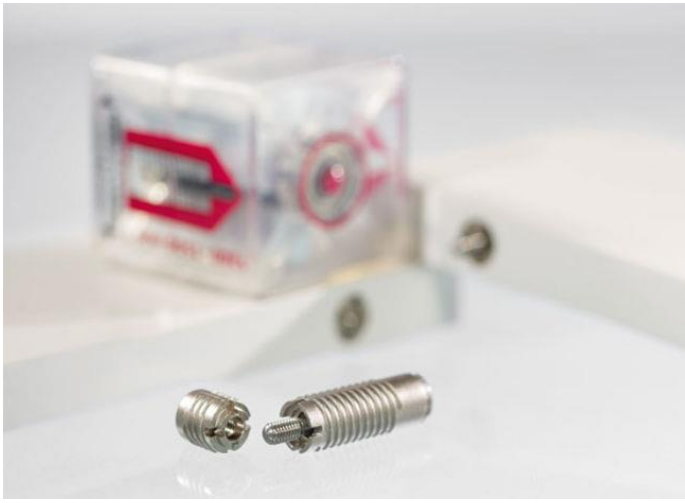

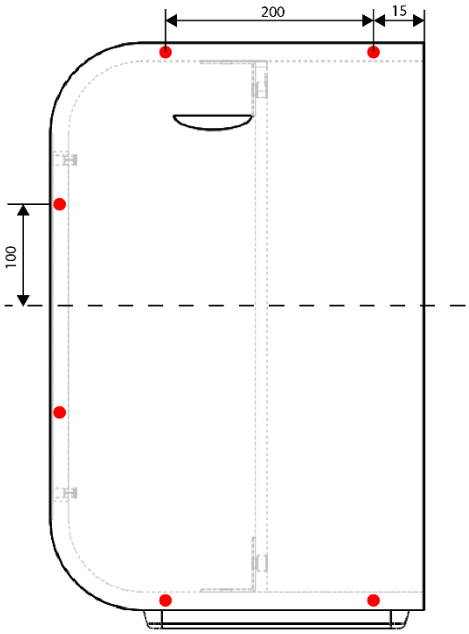

The red dots represent the positions of the magnetic screws.

The rest of the pieces will use screws to be fixed (inner panel or supports), silicone for the front panel within control module's head and a clip pressure system for of the front grid.

CAE analysis

Once the design is finished, we proceed to analyse its behaviour under specific conditions (simulating the everyday use) to determinate if the product pass some quality tests. Therefore, the following study will take place:

Static structural

We will study the response of the cabin against a force which is the maximum head's weight (90N), plus an extra for security (10N), laying over the over the cabin and inside of it:

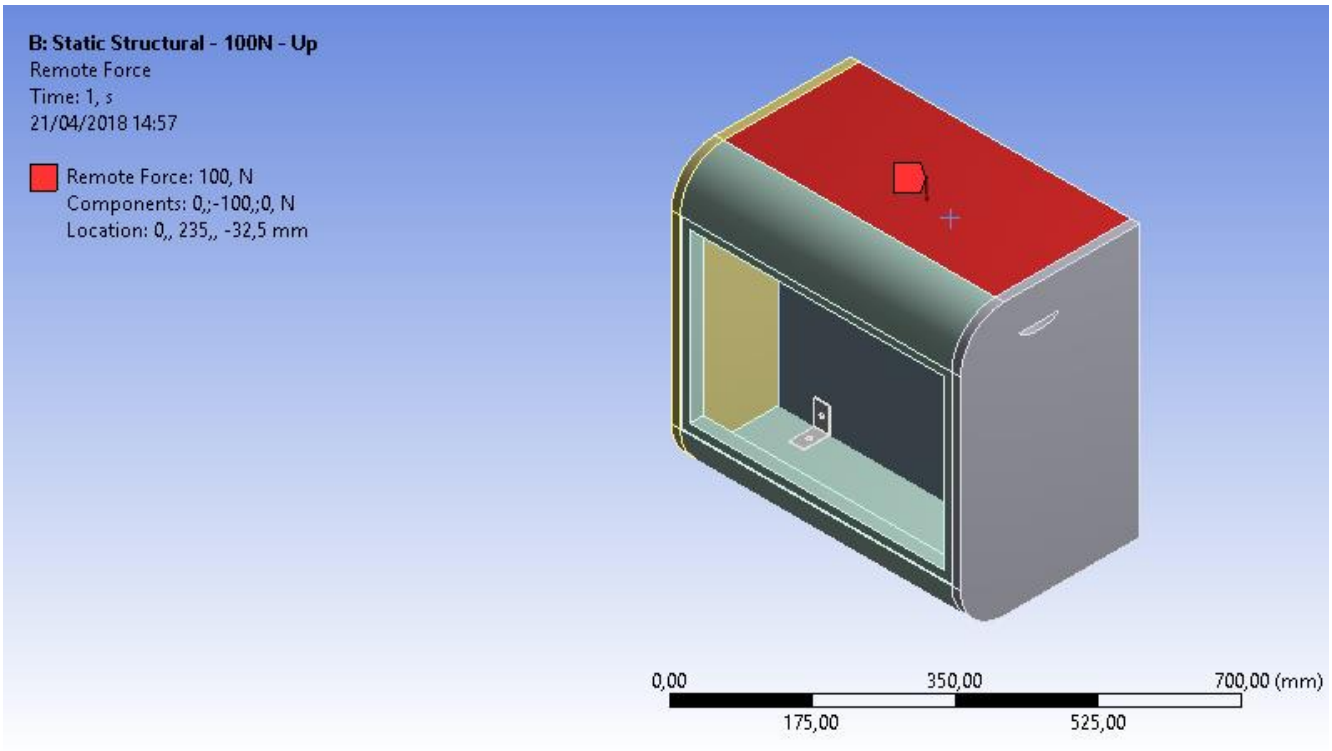

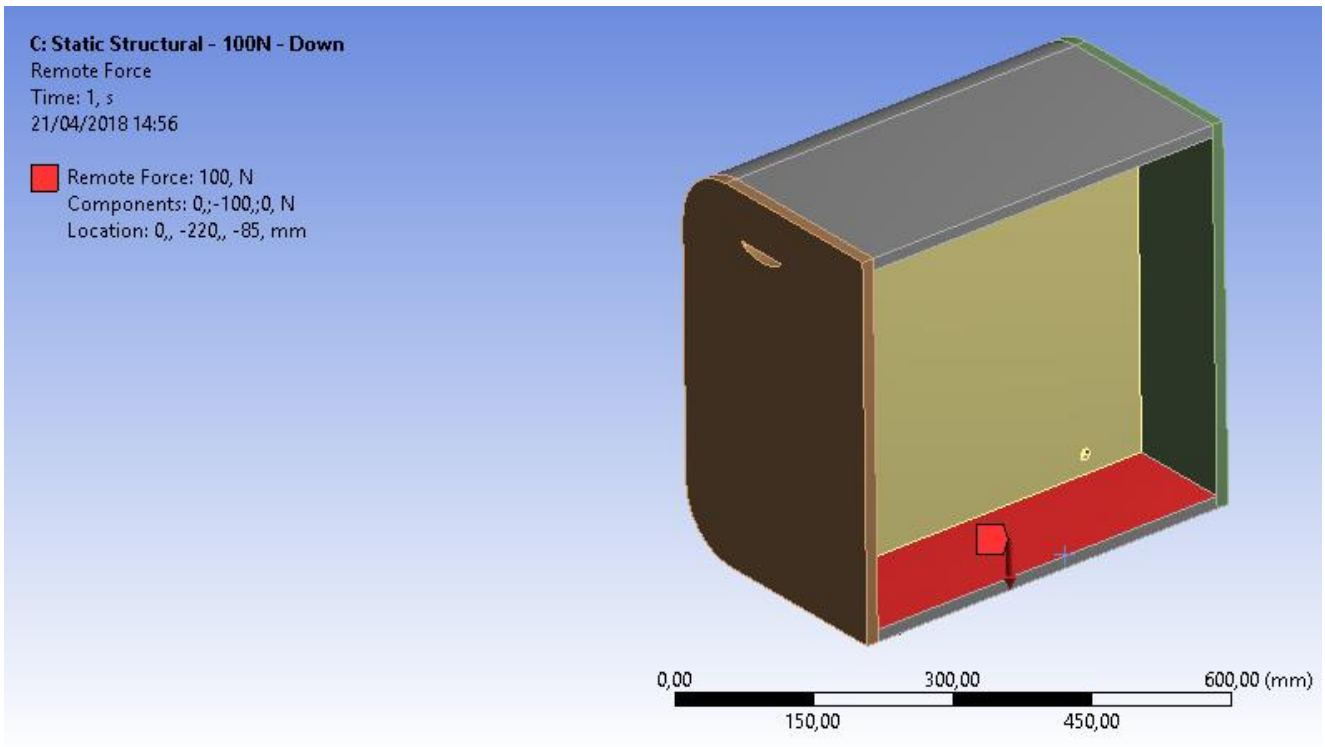

To continue, we should define the materials properties, supports (fixed support) and the type of contact between the elements of the cabin (bounded).

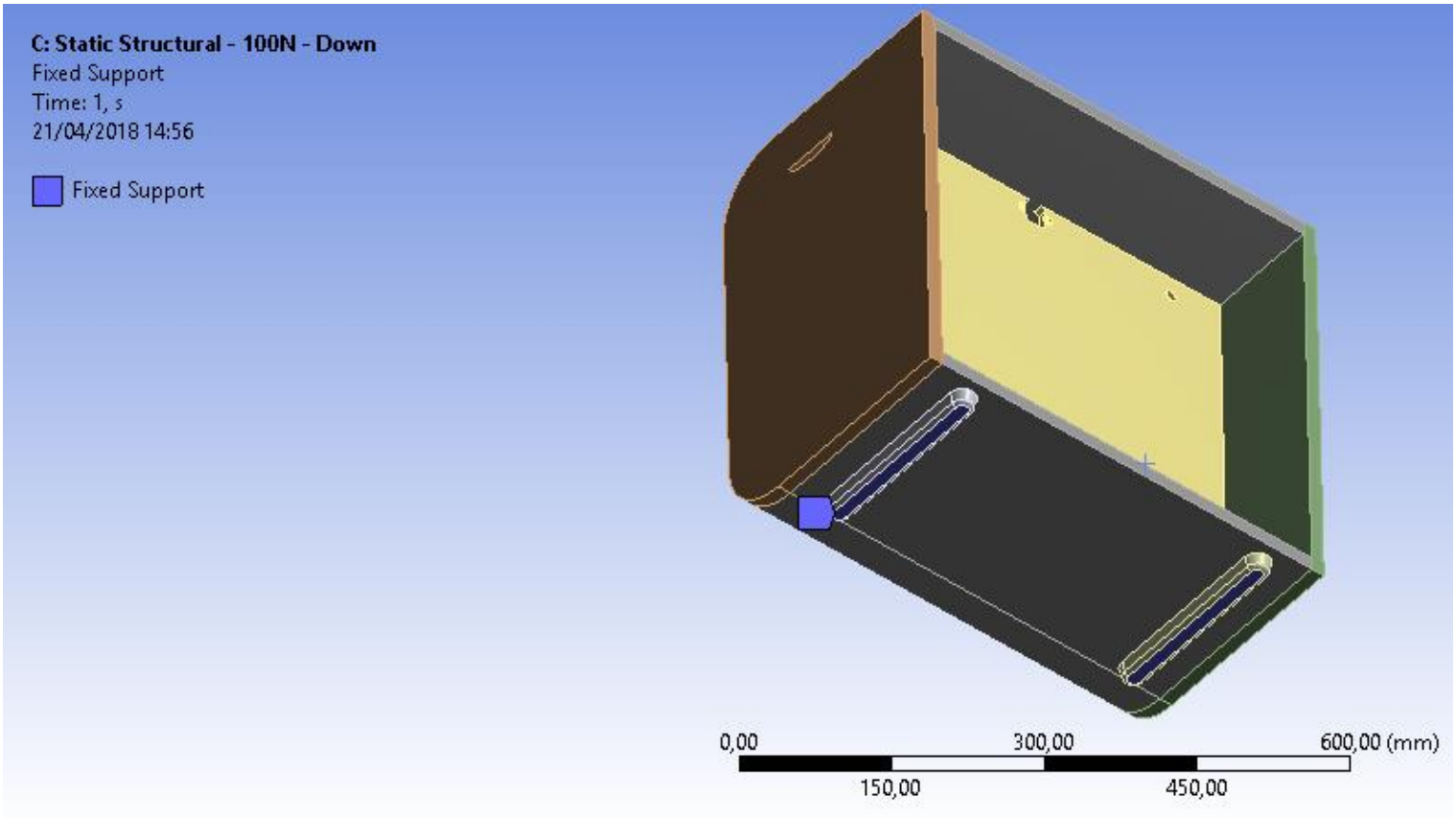

We choose the fixed support because emulates the interaction between the cabin and the surface while an external force is produced vertically.

There are many kinds of contacts, in this case the bonded contact is the most appropriate because all the pieces are glued with each other.

Now we proceed to analyse the simulation, so we can get the total deformation of the plank and the equivalent stress.

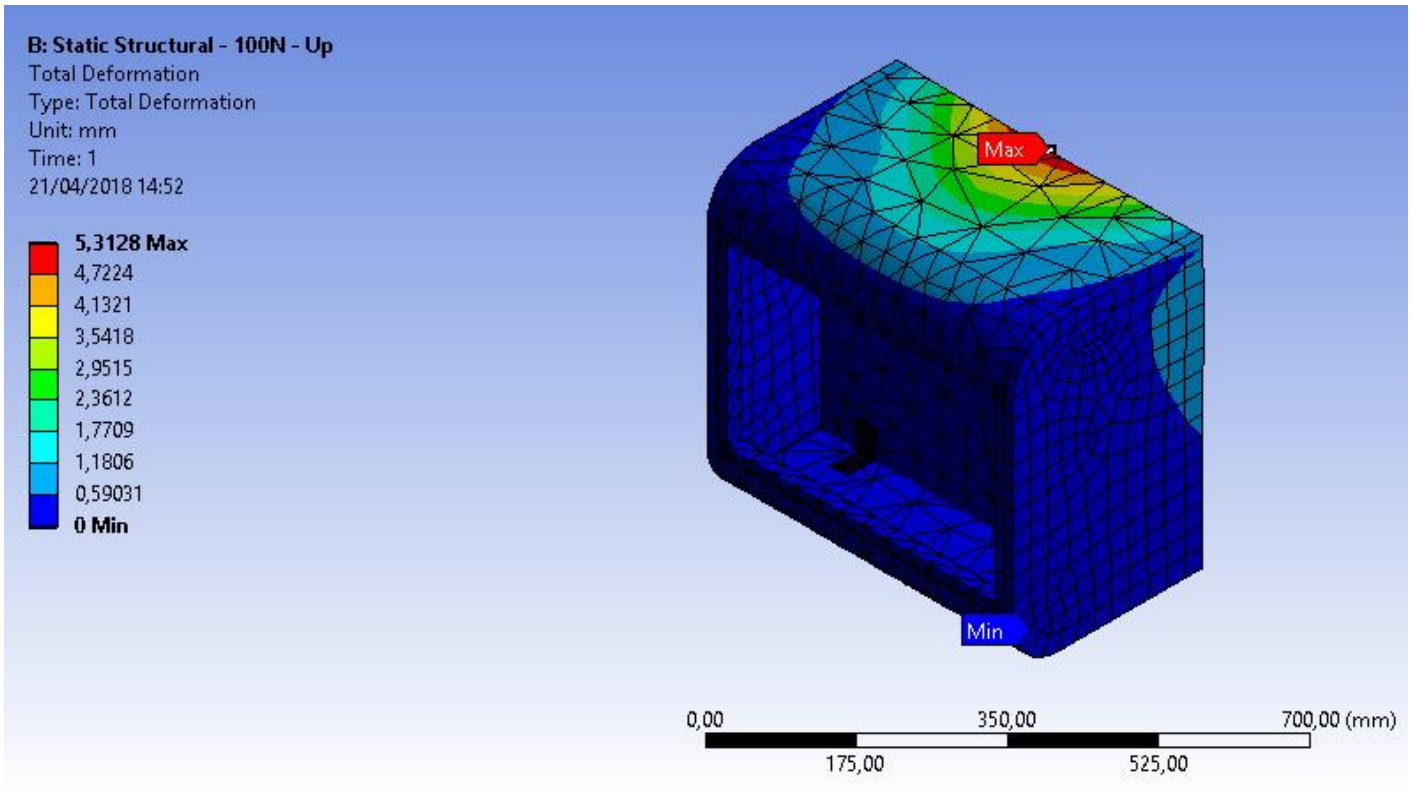

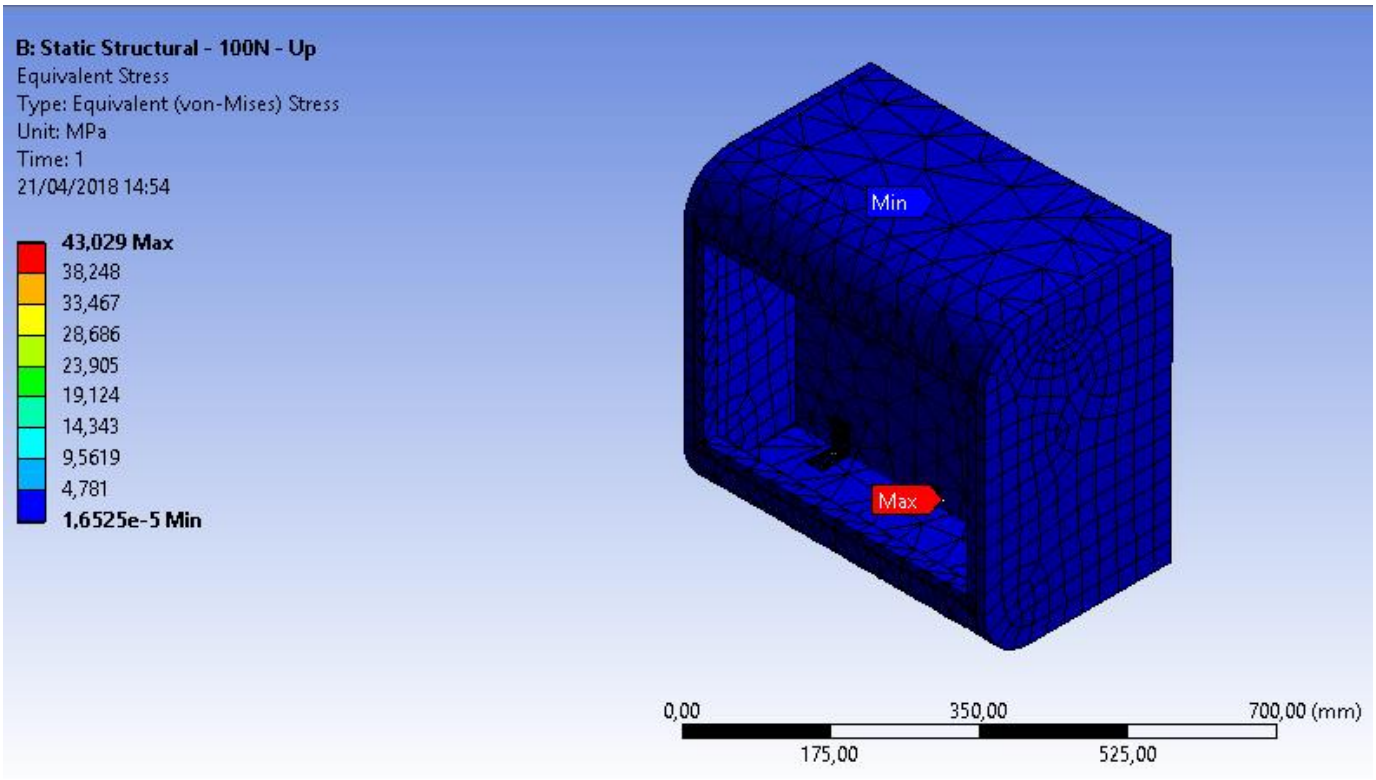

The total deformation is over 5mm and the stress is about 43 MPa. That means the cabin can resist this force without fail, because the stress is under the limit of the used wood (Mahogany = 80,6 MPa).

The second study try to reflect the situation where the head is saved in the back of the cabin:

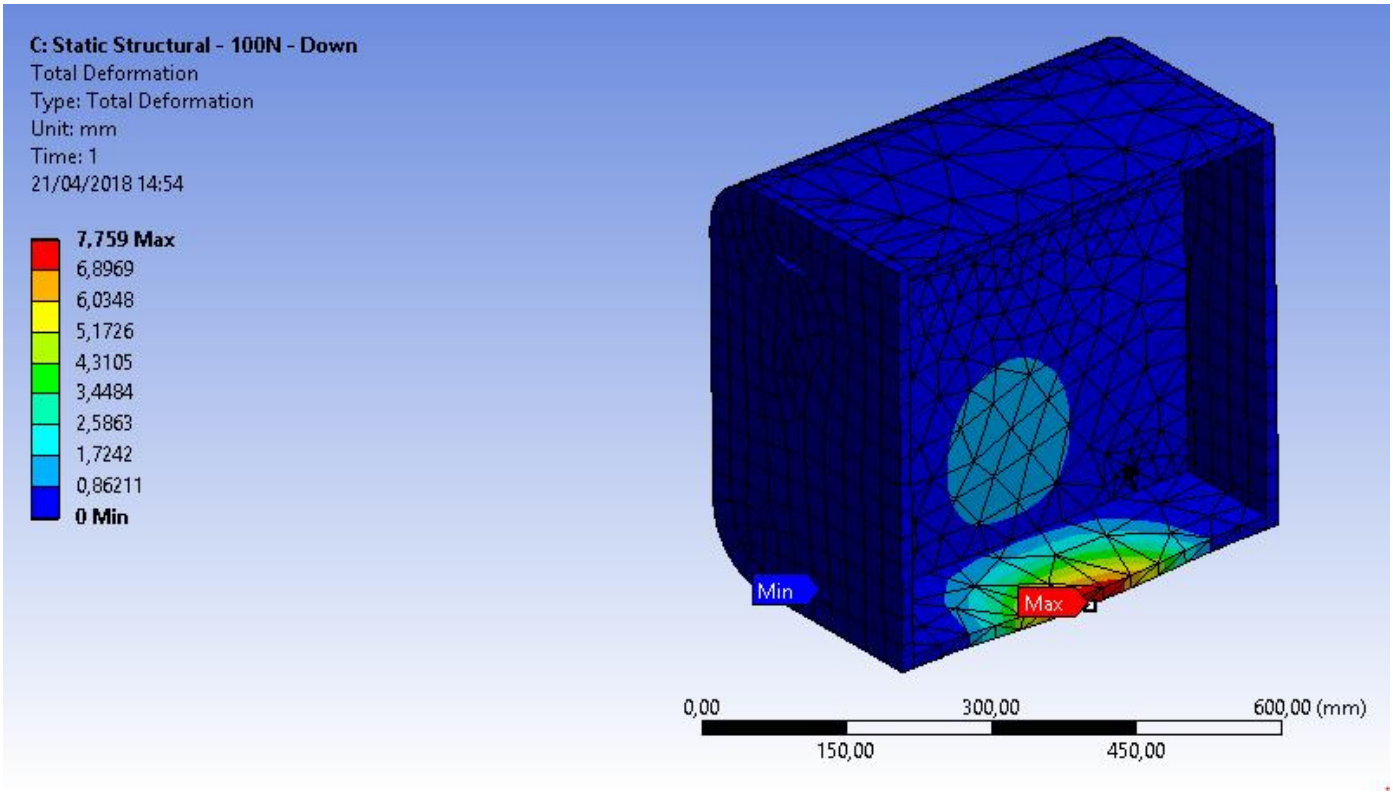

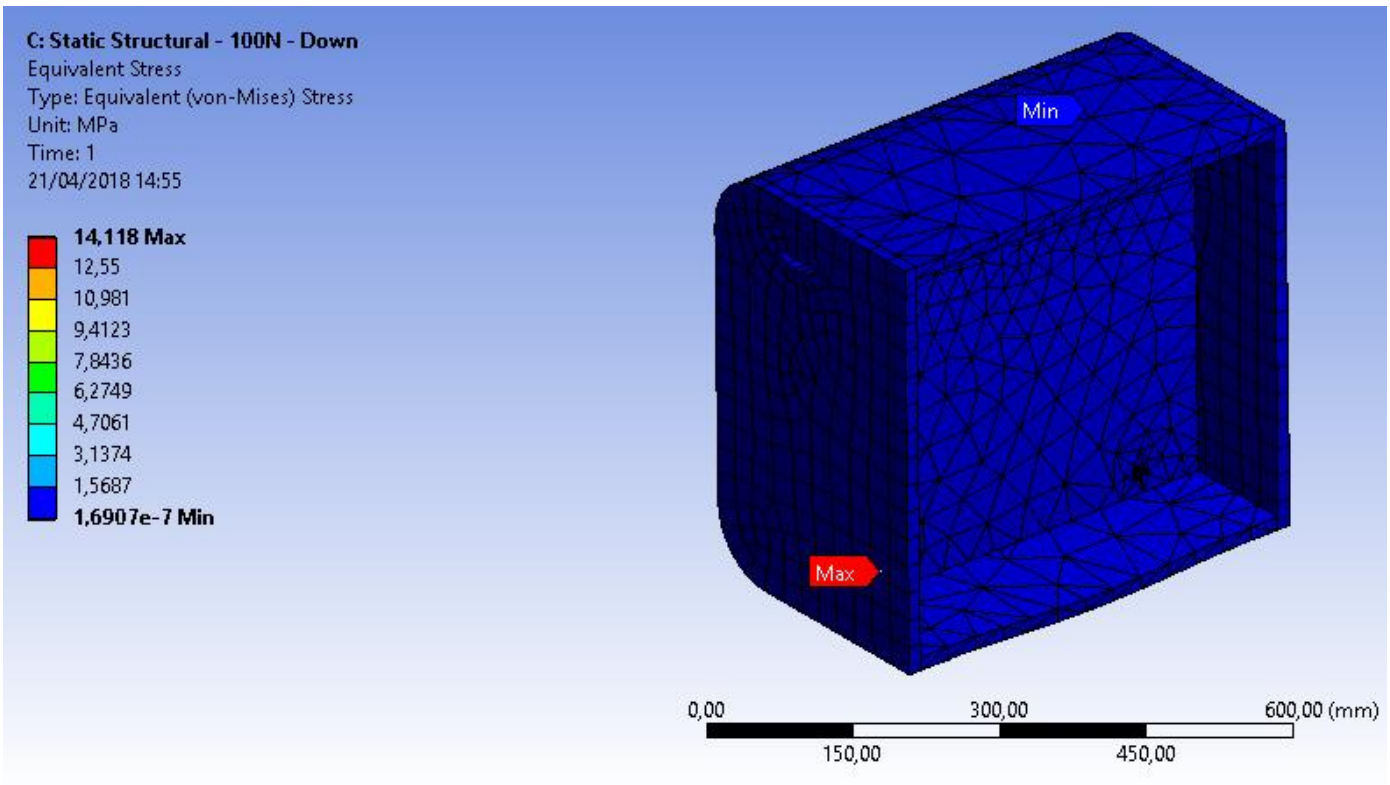

Same as before, the stress doesn't exceed the limit of the material, but we should consider any alternative to avoid the aesthetic flaw due to the small deformation (7,7 mm).

Economic data

In this article, we will try to calculate the manufacturing cost, and other items, of the product to deduce if it would produce benefits at the right price. To achieve this goal, we will introduce some approximated values of different items related with the amplifier since the first design's phase to the final sale of 500.000 units on the first year.

Phase of design

Designer's bill	3.000€
Materials for prototype	1000€
Test	500€
Total	**4.500€**

Phase of manufacturing

Materials	50.000.000€
Components	25.000.000€
Tools	1.000€
Heavy equipment	50.000€
Control and management of waste	6.000€
Staff	18.000€
Total	**75.075.000€**

Phase of sales

Distribution	120.000€
Marketing	100.000€
Packaging	25.000.000€
Total	**25.220.000€**

Total

Total cost	100.299.500€
Cost per unit	200€
Price	**275€**
Benefits per unit	**75€**

After an overview on the product's cost, we can get a benefit of 75€ per unit with a price tag of 275€. It's a very competitive price in comparison with other products in the market.

Annex

Specifications of the amplifiers:

Fender Mustang I v2

Features

20 watts

8” Fender Special Design speaker

17 amp models and 24 onboard presets

Reverb, delay/echo, tremolo, phaser and other effects

USB connectivity for audio recording output

Electronics

Voltage	230V
Wattage	20 Watts
Controls	Gain, Volume, Treble, Bass, Master, Preset Select, Modulation Select, Delay/Reverb Select, Save Button, Exit Button, Tap Tempo Button
Channels	One
Inputs	One – ¼”

Hardware

Cabinet material	7-Ply 3/4" Medium-Density Fibreboard
Amplifier covering	Black textured vinyl
Grille cloth	Silver
Amplifier jewel	Red LED
Front panel	Black
Handle	Moulded Plastic Strap with Black Powder Coated Caps

Speakers

Speaker	One – 8” Fender Special Design
Speaker Wattage	20 Watts
Total impedance	8 ohms

Measurements

Height	368 mm
Width	400 mm
Depth	193 mm
Weight	7,7 kg

Blackstar ID:CORE 40

Features

6 Classic Blackstar voices

Super wide stereo

12 stereo effects

ISF control

Speaker emulated output

Insider software

Presonus studio one DAW Blackstar Edition

Electronics

Voltage	**230V**
Wattage	40 Watts
Controls	6 Voice Control, 12 Effects Control, Tap Tempo, USB Input, Gain, Volume, ISF, Effect Level, Tuner
Channels	6 - Clean Warm, Clean Bright, Crunch, Super Crunch, OD 1, OD 2
Inputs	Guitar Input, MP3/Line Input, USB Input

Hardware

Cabinet material	Medium-Density Fibreboard
Amplifier covering	Black textured vinyl
Grille cloth	Silver
Amplifier jewel	Red and green LED
Front panel	Black
Handle	Moulded Plastic Strap with Black Powder Coated Caps

Speakers

Speaker	Two – 6,5”
Speaker Wattage	20 Watts
Total impedance	8 ohms

Measurements

Height	336 mm
Width	434 mm
Depth	185 mm
Weight	6,2 kg

Blackstar ID 30

Features

6 Classic Blackstar voices

Super wide stereo

12 stereo effects

ISF control

Speaker emulated output

Electronics

Voltage	230V
Wattage	30 Watts
Controls	6 Voice Control, 12 Effects Control, Tap Tempo, USB Input, Gain, Volume, ISF, Effect Level, Tuner
Channels	6 - Clean Warm, Clean Bright, Crunch, Super Crunch, OD 1, OD 2
Inputs	Guitar Input, MP3/Line Input, USB Input

Hardware

Cabinet material	Medium-Density Fibreboard
Amplifier covering	Black textured vinyl
Grille cloth	Silver
Amplifier jewel	Red and green LED
Front panel	Black
Handle	Moulded Plastic Strap with Black Powder Coated Caps

Speakers

Speaker	One 12”
Speaker Wattage	30 Watts
Total impedance	8 ohms

Measurements

Height	460 mm
Width	500 mm
Depth	250 mm
Weight	13 kg

Line 6 Spider V 30

Features

Over 200 amps, effects, and cabs—more than any other amp in its class

USB interface and free recording software to record your best ideas

Drum loops and a built-in metronome for honing your chops

Compatible with FBV3, FBV Shortboard MkII, FBV Express MkII, and FBV2

Electronics

Voltage	230V
Wattage	30 Watts
Controls	Drive, Bass, Mid, Treble and Volume
Channels	-
Inputs	USB, Memory slot, 6.3 Jack, Headphone

Hardware

Cabinet material	Medium-Density Fibreboard
Amplifier covering	Black textured vinyl
Grille cloth	Black
Amplifier jewel	LED
Front panel	Black
Handle	Moulded Plastic Strap with Black Powder Coated Caps

Speakers

Speaker	One – 8” and tweeter
Speaker Wattage	30 Watts
Total impedance	8 ohms

Measurements

Height	381 mm
Width	391 mm
Depth	208 mm
Weight	7,3 kg

Line 6 Spider V 60

Features

60 watts of power

Bi-amped full-range speaker system with 10" loudspeaker + tweeter

Wireless-ready for Line 6 Relay transmitters

Built-in 60-second looper for layering guitar tracks to play over

Over 200 amps, effects, and cabs–more than any other amp in its class

USB interface and free recording software to record your best ideas

Drum loops and a built-in metronome for honing your chops

Compatible with FBV3, FBV Shortboard MkII, FBV Express MkII, and FBV2

Electronics

Voltage	230V
Wattage	60 Watts
Controls	Drive, Bass, Mid, Treble and Volume
Channels	-
Inputs	Guitar Input, MP3/Line Input, USB Input, Memory slot

Hardware

Cabinet material	Medium-Density Fibreboard
Amplifier covering	Black textured vinyl
Grille cloth	Black
Amplifier jewel	LED
Front panel	Black
Handle	Moulded Plastic Strap with Black Powder Coated Caps

Speakers

Speaker	One – 10”
Speaker Wattage	60 Watts
Total impedance	8 ohms

Measurements

Height	429 mm
Width	442 mm
Depth	231 mm
Weight	11 kg

Vox VX II

Features

30 watts of power

One-piece speaker enclosure

VET technology

11 classic amps, 8 effects

VOX Tone Room Software

Electronics

Voltage	**230V**
Wattage	30 Watts
Controls	Drive, Bass, Mid, Treble and Volume
Channels	-
Inputs	Guitar Input, MP3/Line Input, USB Input

Hardware

Cabinet material	ABS
Amplifier covering	Black textured vinyl
Grille cloth	Black
Amplifier jewel	LED
Front panel	Black
Handle	Moulded Plastic Strap with Black Powder Coated Caps

Speakers

Speaker	One – 8”
Speaker Wattage	30 Watts
Total impedance	4 ohms

Measurements

Height	313 mm
Width	354 mm
Depth	192 mm
Weight	3,8 kg

Vox VT40X

Features

40 watts of power

Valvetronix tube preamp

One-piece speaker enclosure

VET technology

11 classic amps, 8 effects

VOX Tone Room Software

Electronics

Voltage	230V
Wattage	40 Watts
Controls	Drive, Bass, Mid, Treble and Volume
Channels	-
Inputs	Guitar Input, MP3/Line Input, USB Input, Footswitch

Hardware

Cabinet material	ABS
Amplifier covering	Black textured vinyl
Grille cloth	Black
Amplifier jewel	LED
Front panel	Black
Handle	Moulded Plastic Strap with Black Powder Coated Caps

Speakers

Speaker	One – 10”
Speaker Wattage	40 Watts
Total impedance	5 ohms

Measurements

Height	404 mm
Width	462 mm
Depth	225 mm
Weight	9,5 kg

Material's data sheet:

Wood

Common Name(s): Santos Mahogany, Cabreuva

Scientific Name: Myroxylon balsamum

Distribution: Southern Mexico and Central and South America

Tree Size: 65-100 ft (20-30 m) tall, 2-3 ft (.6-1.0 m) trunk diameter

Average Dried Weight: 57 lbs/ft3 (915 kg/m3)

Specific Gravity (Basic, 12% MC): .74, .91

Janka Hardness: 2,400 lbf (10,680 N)

Modulus of Rupture: 21,570 lbf/in2 (148.7 MPa)

Elastic Modulus: 2,380,000 lbf/in2 (16.41 GPa)

Crushing Strength: 11,680 lbf/in2 (80.6 MPa)

Shrinkage: Radial: 3.8%, Tangential: 6.2%, Volumetric: 10.0%, T/R Ratio: 1.6

Colour/Appearance: There is a fair degree of colour variation between boards of Santos Mahogany, ranging from a lighter golden brown to a darker purplish red or burgundy. The colour tends to turn redder/purple with age. Quarter sawn sections can show a striped or ribbon pattern.

Grain/Texture: Grain is usually interlocked, with a medium to fine texture. Good natural lustre.

Endgrain: Diffuse-porous; large pores in no specific arrangement, few; commonly in radial multiples of 2-3; reddish brown heartwood deposits common; growth rings usually

indistinct, sometimes distinct due to discontinuous bands of marginal parenchyma; narrow rays not visible without lens, normal to fairly close spacing; parenchyma vasicentric and confluent.

Rot Resistance: Rated as very durable in regard to decay resistance, with mixed reports on susceptibility to insect attack.

Workability: Santos Mahogany has a noticeable blunting effect on cutting edges. Working characteristics are rated as fair to poor, because of both its density and its interlocked grain. Staining or gluing can sometimes be problematic, though the wood finishes well.

Odor: Santos Mahogany has a very distinctive spicy scent when being worked. Trees from the Myroxylon genus are used to make Balsam of Peru, an ingredient used in perfumes.

Allergies/Toxicity: Although severe reactions are quite uncommon, Santos Mahogany has been reported to cause skin and respiratory irritation. See the articles Wood Allergies and Toxicity and Wood Dust Safety for more information.

Pricing/Availability: Should be in the mid-range for an imported timber; comparing similarly to other exotic hardwoods used in flooring, such as Ipe.

Sustainability: This wood species is not listed in the CITES Appendices or on the IUCN Red List of Threatened Species.

Common Uses: Flooring, furniture, interior trim, and heavy construction.

Comments: Despite its name, Santos Mahogany is not really related to true Mahogany (Swietenia genus), nor is it even in the Meliaceae family, as is the case with African Mahogany (Khaya genus) and Spanish Cedar (Cedrela odorata). Santos Mahogany can have a Mahogany-like appearance, though it is typically much denser, harder, and stronger than true Mahogany—and much more difficult to work. Santos Mahogany trees, sometimes called Balsamo, are used in the production of the substance called Balsam of Peru, used as a ragrance in perfumes.

Metal

Aluminium 6061-T6

General 6061 characteristics and uses: Excellent joining characteristics, good acceptance of applied coatings. Combines relatively high strength, good workability, and high resistance to corrosion; widely available. The T8 and T9 tempers offer better chipping characteristics over the T6 temper.

Applications: Aircraft fittings, camera lens mounts, couplings, marine's fittings and hardware, electrical fittings and connectors, decorative or misc. hardware, hinge pins, magneto parts, brake pistons, hydraulic pistons, appliance fittings, valves and valve parts; bike frames.

Properties:

Physical Properties	Metric	English	Comments
Density	2.70 g/cc	0.0975 lb/in³	AA; Typical

Mechanical Properties	Metric	English	Comments
Hardness, Brinell	95	95	AA; Typical; 500 g load; 10 mm ball
Hardness, Knoop	120	120	Converted from Brinell Hardness Value
Hardness, Rockwell A	40	40	Converted from Brinell Hardness Value
Hardness, Rockwell B	60	60	Converted from Brinell Hardness Value
Hardness, Vickers	107	107	Converted from Brinell Hardness Value
Tensile Strength, Ultimate	310 MPa	45000 psi	AA; Typical
	24.0 MPa @Temperature 371 °C	3480 psi @Temperature 700 °F	
	32.0 MPa @Temperature 316 °C	4640 psi @Temperature 601 °F	
	51.0 MPa @Temperature 260 °C	7400 psi @Temperature 500 °F	
	131 MPa @Temperature 204 °C	19000 psi @Temperature 399 °F	
	234 MPa @Temperature 149 °C	33900 psi @Temperature 300 °F	
	290 MPa @Temperature 100 °C	42100 psi @Temperature 212 °F	
	310 MPa @Temperature 24.0 °C	45000 psi @Temperature 75.2 °F	
	324 MPa @Temperature -28.0 °C	47000 psi @Temperature -18.4 °F	
	338 MPa @Temperature -80.0 °C	49000 psi @Temperature -112 °F	
	414 MPa @Temperature -196 °C	60000 psi @Temperature -321 °F	
Tensile Strength, Yield	276 MPa	40000 psi	AA; Typical
	12.0 MPa @Strain 0.200 %, Temperature 371 °C	1740 psi @Strain 0.200 %, Temperature 700 °F	
	19.0 MPa @Strain 0.200 %, Temperature 316 °C	2760 psi @Strain 0.200 %, Temperature 601 °F	
	34.0 MPa @Strain 0.200 %, Temperature 260 °C	4930 psi @Strain 0.200 %, Temperature 500 °F	
	103 MPa @Strain 0.200 %, Temperature 204 °C	14900 psi @Strain 0.200 %, Temperature 399 °F	
	214 MPa @Strain 0.200 %, Temperature 149 °C	31000 psi @Strain 0.200 %, Temperature 300 °F	
	262 MPa @Strain 0.200 %, Temperature 100 °C	38000 psi @Strain 0.200 %, Temperature 212 °F	
	276 MPa @Strain 0.200 %, Temperature 24.0 °C	40000 psi @Strain 0.200 %, Temperature 75.2 °F	
	283 MPa @Strain 0.200 %, Temperature -28.0 °C	41000 psi @Strain 0.200 %, Temperature -18.4 °F	
	290 MPa @Strain 0.200 %, Temperature -80.0 °C	42100 psi @Strain 0.200 %, Temperature -112 °F	
	324 MPa @Strain 0.200 %, Temperature -196 °C	47000 psi @Strain 0.200 %, Temperature -321 °F	
Elongation at Break	17 % @Temperature -28.0 °C	17 % @Temperature -18.4 °F	
	17 % @Temperature 24.0 °C	17 % @Temperature 75.2 °F	
	18 % @Temperature -80.0 °C	18 % @Temperature -112 °F	
	18 % @Temperature 100 °C	18 % @Temperature 212 °F	
	20 % @Temperature 149 °C	20 % @Temperature 300 °F	
	22 % @Temperature -196 °C	22 % @Temperature -321 °F	
	28 % @Temperature 204 °C	28 % @Temperature 399 °F	
	60 % @Temperature 260 °C	60 % @Temperature 500 °F	
	85 % @Temperature 316 °C	85 % @Temperature 601 °F	
	95 % @Temperature 371 °C	95 % @Temperature 700 °F	
	12 % @Thickness 1.59 mm	12 % @Thickness 0.0625 in	AA; Typical
	17 % @Diameter 12.7 mm	17 % @Diameter 0.500 in	AA; Typical
Modulus of Elasticity	68.9 GPa	10000 ksi	AA; Typical; Average of tension and compression. Compression modulus is about 2% greater than tensile modulus.
Notched Tensile Strength	324 MPa	47000 psi	2.5 cm width x 0.16 cm thick side-notched specimen, K_t = 17.
Ultimate Bearing Strength	607 MPa	88000 psi	Edge distance/pin diameter = 2.0
Bearing Yield Strength	386 MPa	56000 psi	Edge distance/pin diameter = 2.0
Poissons Ratio	0.33	0.33	Estimated from trends in similar Al alloys.
Fatigue Strength	96.5 MPa @# of Cycles 5.00e+8	14000 psi @# of Cycles 5.00e+8	completely reversed stress; RR Moore machine/specimen
Fracture Toughness	29.0 MPa-m½	26.4 ksi-in½	K_{IC}; TL orientation.
Machinability	50 %	50 %	0-100 Scale of Aluminum Alloys
Shear Modulus	26.0 GPa	3770 ksi	Estimated from similar Al alloys.
Shear Strength	207 MPa	30000 psi	AA; Typical

Electrical Properties	Metric	English	Comments
Electrical Resistivity	0.00000399 ohm-cm @Temperature 20.0 °C	0.00000399 ohm-cm @Temperature 68.0 °F	AA; Typical

Thermal Properties	Metric	English	Comments
CTE, linear	23.6 µm/m-°C @Temperature 20.0 - 100 °C	13.1 µin/in-°F @Temperature 68.0 - 212 °F	AA; Typical; average over range
	25.2 µm/m-°C @Temperature 20.0 - 300 °C	14.0 µin/in-°F @Temperature 68.0 - 572 °F	
Specific Heat Capacity	0.896 J/g-°C	0.214 BTU/lb-°F	
Thermal Conductivity	167 W/m-K	1160 BTU-in/hr-ft²-°F	AA; Typical at 77°F
Melting Point	582 - 651.7 °C	1080 - 1205 °F	AA; Typical range based on typical composition for wrought products 1/4 inch thickness or greater; Eutectic melting can be completely eliminated by homogenization.
Solidus	582 °C	1080 °F	AA; Typical
Liquidus	651.7 °C	1205 °F	AA; Typical

Processing Properties	Metric	English	Comments
Solution Temperature	529 °C	985 °F	
Aging Temperature	160 °C	320 °F	Rolled or drawn products; hold at temperature for 18 hr
	177 °C	350 °F	Extrusions or forgings; hold at temperature for 8 hr

Component Elements Properties	Metric	English	Comments
Aluminum, Al	95.8 - 98.6 %	95.8 - 98.6 %	As remainder
Chromium, Cr	0.04 - 0.35 %	0.04 - 0.35 %	
Copper, Cu	0.15 - 0.40 %	0.15 - 0.40 %	
Iron, Fe	<= 0.70 %	<= 0.70 %	
Magnesium, Mg	0.80 - 1.2 %	0.80 - 1.2 %	
Manganese, Mn	<= 0.15 %	<= 0.15 %	
Other, each	<= 0.05 %	<= 0.05 %	
Other, total	<= 0.15 %	<= 0.15 %	
Silicon, Si	0.40 - 0.80 %	0.40 - 0.80 %	
Titanium, Ti	<= 0.15 %	<= 0.15 %	
Zinc, Zn	<= 0.25 %	<= 0.25 %	

Polymer

ABS NOVODUR P2H-AT

Product Texts			
standard impact strength, easy flowing, high gloss, contains antistatic additive			
Rheological properties	**Value**	**Unit**	**Test Standard**
Melt volume-flow rate, MVR	**37**	cm³/10min	ISO 1133
Temperature	**220**	°C	ISO 1133
Load	**10**	kg	ISO 1133
Mechanical properties	**Value**	**Unit**	**Test Standard**
Tensile modulus	**2500**	MPa	ISO 527-1/-2
Yield stress	**44**	MPa	ISO 527-1/-2
Yield strain	**2.1**	%	ISO 527-1/-2
Tensile creep modulus, 1h	**2200**	MPa	ISO 899-1
Tensile creep modulus, 1000h	**1500**	MPa	ISO 899-1
Charpy impact strength, +23°C	**100**	kJ/m²	ISO 179/1eU
Charpy impact strength, -30°C	**80**	kJ/m²	ISO 179/1eU
Charpy notched impact strength, +23°C	**16**	kJ/m²	ISO 179/1eA
Charpy notched impact strength, -30°C	**7**	kJ/m²	ISO 179/1eA
Thermal properties	**Value**	**Unit**	**Test Standard**
Temp. of deflection under load, 1.80 MPa	**93**	°C	ISO 75-1/-2
Temp. of deflection under load, 0.45 MPa	**97**	°C	ISO 75-1/-2
Vicat softening temperature, 50°C/h 50N	**98**	°C	ISO 306
Coeff. of linear therm. expansion, parallel	**90**	E-6/K	ISO 11359-1/-2
Burning Behav. at 1.5 mm nom. thickn.	**HB**	class	IEC 60695-11-10
Thickness tested (1.5)	**1.6**	mm	IEC 60695-11-10
Electrical properties	**Value**	**Unit**	**Test Standard**
Relative permittivity, 100Hz	**3**	-	IEC 62631-2-1
Relative permittivity, 1MHz	**2.9**	-	IEC 62631-2-1
Dissipation factor, 100Hz	**55**	E-4	IEC 62631-2-1
Dissipation factor, 1MHz	**90**	E-4	IEC 62631-2-1
Volume resistivity	**>1E13**	Ohm*m	IEC 62631-3-1
Surface resistivity	**>1E15**	Ohm	IEC 62631-3-2
Electric strength	**34**	kV/mm	IEC 60243-1
Comparative tracking index	**600**	-	IEC 60112
Other properties	**Value**	**Unit**	**Test Standard**
Density	**1050**	kg/m³	ISO 1183
Rheological calculation properties	**Value**	**Unit**	**Test Standard**
Density of melt	**895**	kg/m³	-
Thermal conductivity of melt	**0.129**	W/(m K)	-
Spec. heat capacity melt	**1800**	J/(kg K)	-
Ejection temperature	**85**	°C	-
Test specimen production	**Value**	**Unit**	**Test Standard**
Injection Molding, melt temperature	**240**	°C	ISO 294
Injection Molding, mold temperature	**70**	°C	ISO 10724

Injection Molding, injection velocity	**240**	mm/s	ISO 294

Diagrams

Viscosity-shear rate

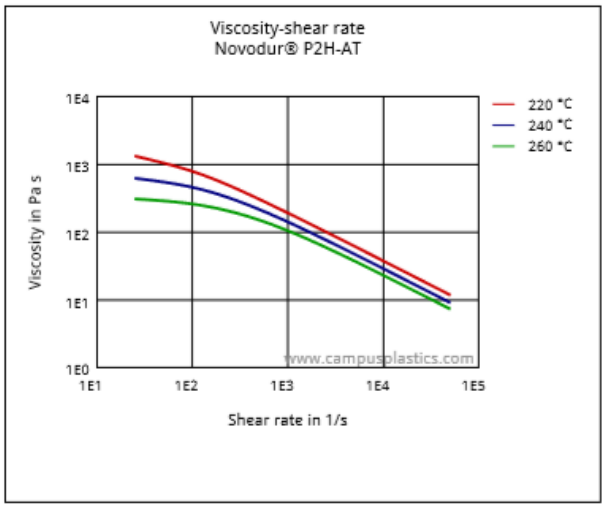

Shearstress-shear rate

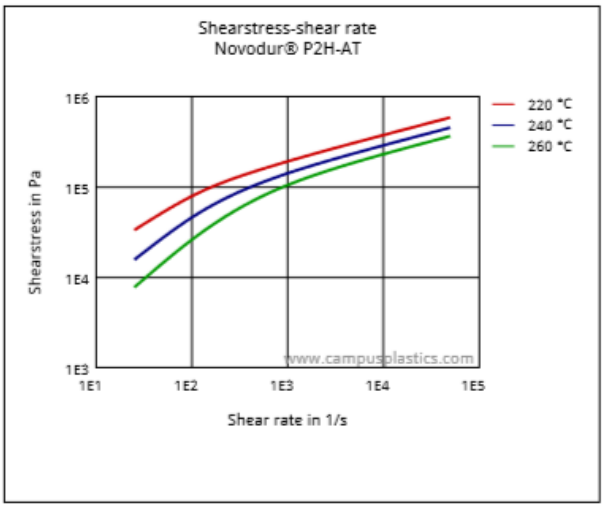

Dynamic Shear modulus-temperature

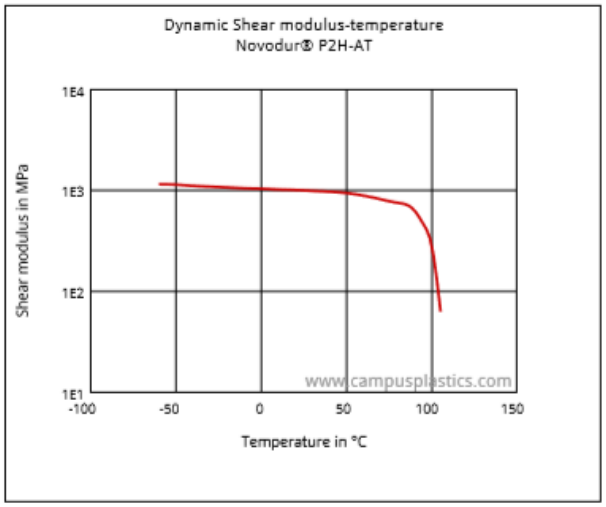

Stress-strain

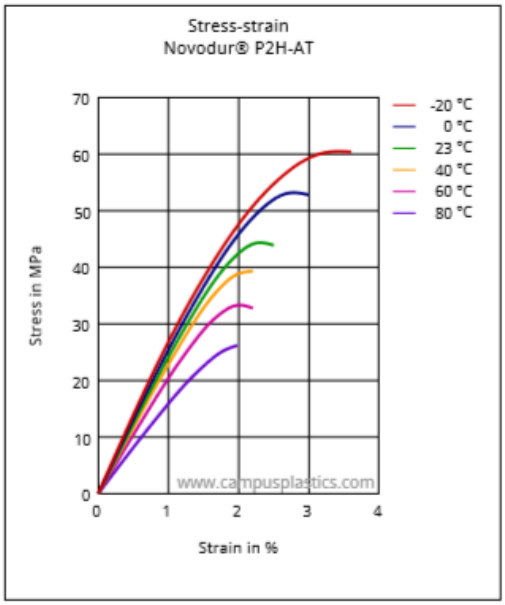

Secant modulus-strain

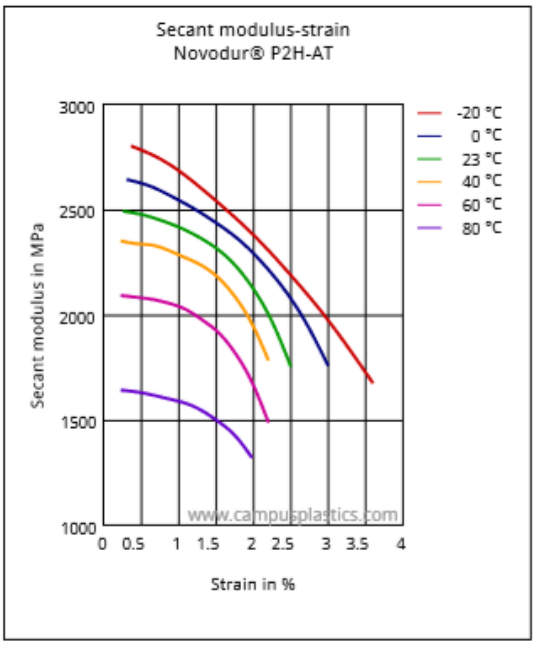

Stress-strain (isochronous) 23°C

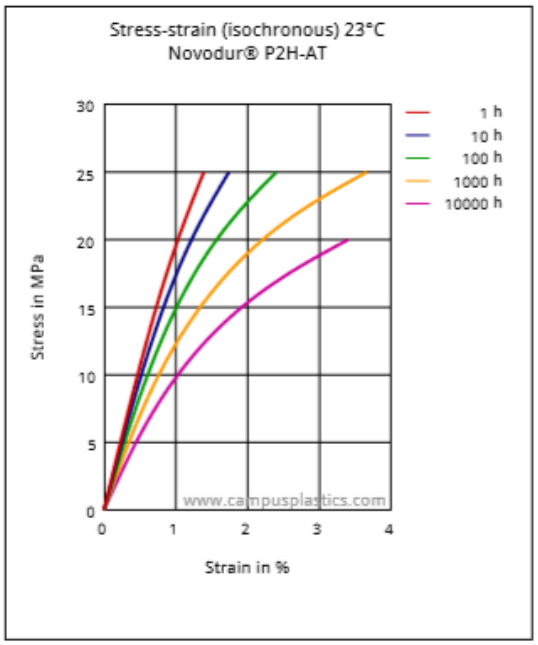

Creep modulus-time 23°C

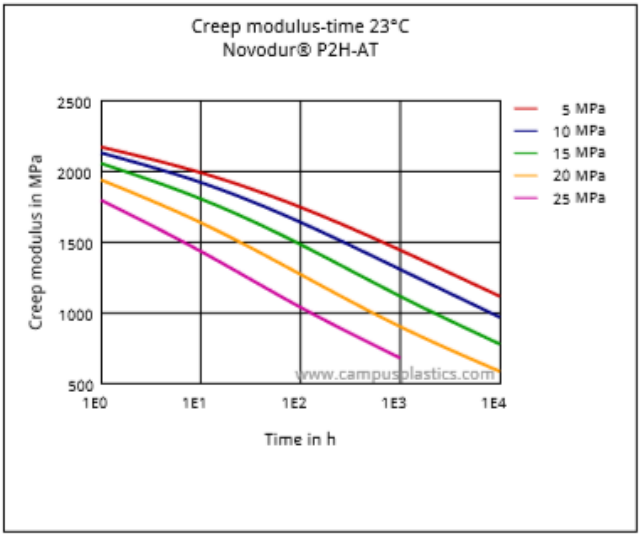

Stress-strain (isochronous) 40°C

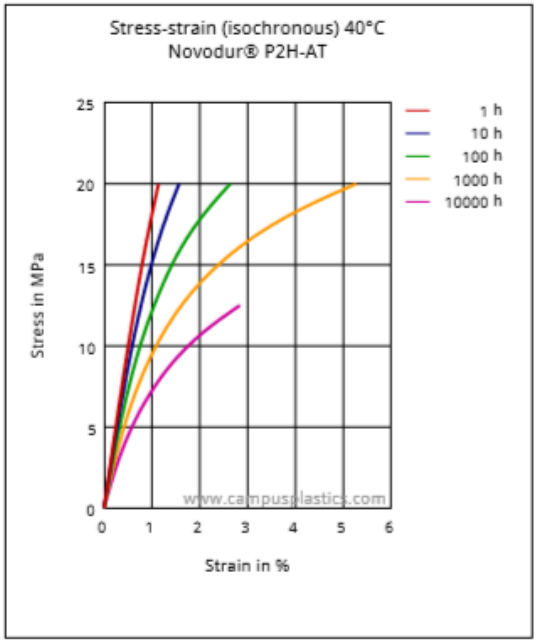

Creep modulus-time 40°C

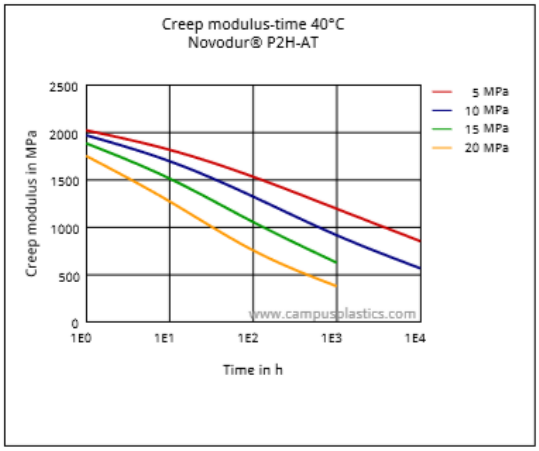

Stress-strain (isochronous) 60°C

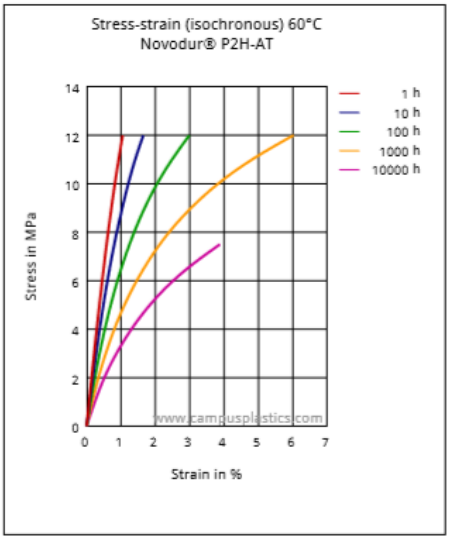

Creep modulus-time 60°C

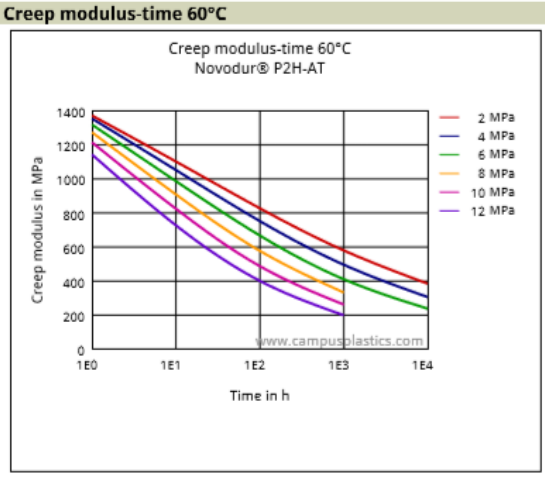

Stress-strain (isochronous) 80°C

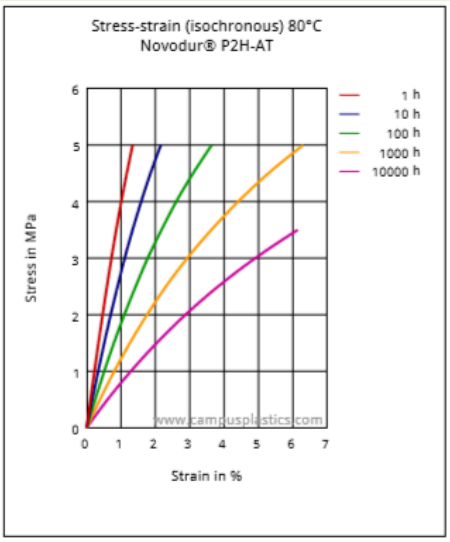

Creep modulus-time 80°C

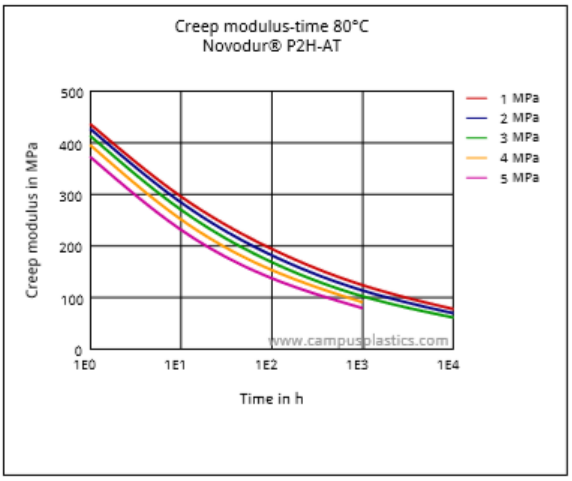

Specific volume-temperature (pvT)

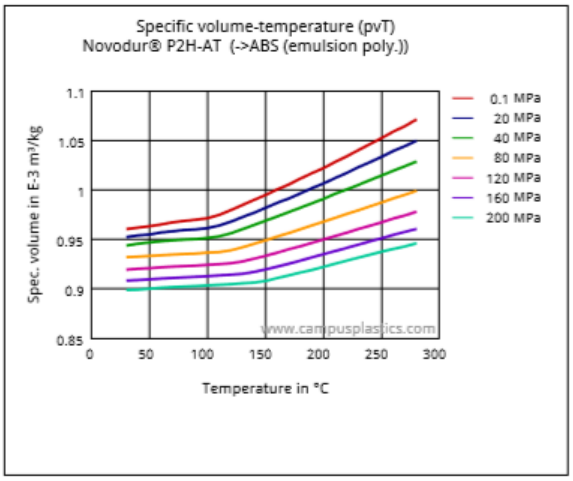

Characteristics

Processing

Injection Molding

Regional Availability

Europe, Asia Pacific, South and Central America, Near East/Africa

Join system

Invis Mx2

Invis Mx is the unique connection that satisfies the highest demands for aesthetics, stability and productivity. With no visible openings, Invis Mx can be quickly detached and reconnected at any time via its magnet drive. The Invis Mx connectors and studs are quickly and easily screwed into prepared 12 mm drill holes using a cordless drill. The MiniMag is then fixed to the cordless drill and rotated on the surface to close the connection with a clamping force of up to 250 kg per connector.

Technical information:

- Size: Ø 12x35mm / Ø 12x14 mm
- Drill: Ø12mm
- Material connector: Zinc
- Installation tolerance: ± 0.1 mm
- Clamping force: 250 kg
- Tensile strength 2000N

Smith & Co.

Glue for laminating

Smith's Layup and Laminating Epoxy is the most appropriate product for gluing large areas such as laminating sheets of plywood, or in "stitch-and-glue" boat construction. It is exceptionally compatible in wood/fiberglass/epoxy composite boat construction and ideally suited for glass layup on glass/polyester hulls where blister repair requires additional glass layup.

Lower-viscosity products may wet glass cloth faster but will be less flexible than the wood and can split the wood or crack themselves with age, stress and wood expansion/contraction. Smith's Layup and Laminating Epoxy has a flexibility comparable to wood because its formulation and ingredients are derived in large part from the natural resins of wood itself.

Glue for joining

Oak and Teak glue, the all wood glue, is a two-part epoxy resin made largely from the resins of wood itself. That is why it can dissolve the natural oils of oily hardwoods, and why it bonds all oily hardwoods such as Teak, Cocobolo and Ebony. Epoxy glues made from petrochemicals cannot do this. Oak and Teak Epoxy Wood Glue will of course bond all non-oily hardwoods, that lesser epoxies are also capable of gluing. Oak and Teak Epoxy Wood Glue is unaffected by the natural acids common to many woods, which is why it bonds Oak so readily.

It will also (with proper chemical surface preparation) glue a wide variety of metals(instructions here), glass, rubber and also glue plastic materials(instructions here). The cured adhesive is completely waterproof and weatherproof.
Our Epoxy Clean-up Solvent will dissolve and clean up excess Oak and Teak Epoxy Glue before it has gelled. Once cured, there is no clean-up solvent. The cured adhesive is easily sanded back and leaves an unobtrusive glue line. It is a translucent orange in colour.

Oak and Teak epoxy glue uses Smith and Co's Dual Synergistic Catalyst™, a breakthrough in the control of epoxy resin curing. This new technology not only gives a long working time (without smoking like other brands), but also cures twice as fast as older-technology products.

Bibliography

Thomann (web site). 2017. Thomann: amplifiers for electric guitars. Germany. Extracted from: https://www.thomann.de/es/fender_mustang_ii_v2.html

Thomann (web site). 2017. Thomann: amplifiers for electric guitars. Germany. Extracted from: from: https://www.thomann.de/es/blackstar_id_core_40.htm

Thomann (web site). 2017. Thomann: amplifiers for electric guitars. Germany. Extracted from: from: https://www.thomann.de/es/line6_spider_iv_30.htm

Thomann (web site). 2017. Thomann: amplifiers for electric guitars. Germany. Extracted from: from: https://www.thomann.de/es/vox_vx_ii.htm

Thomann (web site). 2017. Thomann: amplifiers for electric guitars. Germany. Extracted from: from: https://www.thomann.de/es/blackstar_id30_tvp.htm

Thomann (web site). 2017. Thomann: amplifiers for electric guitars. Germany. Extracted from: from: https://www.thomann.de/es/vox_vt40x.htm

Thomann (web site). 2017. Thomann: amplifiers for electric guitars. Germany. Extracted from: from: https://www.thomann.de/es/line6_spider_v_60.htm

Fender (web site). 2016. Fender: contemporary digital amplifiers. USA. Extracted from: https://shop.fender.com/en-ES/guitar-amplifiers/contemporary-digital/mustang-i-v.2/2300106900.html#q=mustang&qSubmit=&start=1

Blackstar Amps (web site). 2016. Blackstar: products. United Kingdom. Extracted from: https://www.blackstaramps.com/uk/products/idcore-stereo-40

Blackstar Amps (web site). 2016. Blackstar: products. United Kingdom. Extracted from: https://www.blackstaramps.com/uk/products/id30-tvp

Vox Amps (web site). 2015. Vox amps: VXII. United Kingdom. Extracted from: https://www.voxamps.com/VXII

Vox Amps (web site). 2015. Vox amps: VT40X. United Kingdom. Extracted from: https://www.voxamps.com/VT40X

Line 6 (web site). 2017. Line 6: Spider series. USA. Extracted from: https://line6.com/spider-v/

Behance (web site). 2017. Jaapoki free font. Extracted from: https://www.behance.net/gallery/19084983/Jaapokki-Free-Font

Pantone (web site). 2017. Colour finder. USA. Extracted from: https://www.pantone.com/color-finder/16-3803-TPX

The Wood Database (web site). 2008. Santos Mahogany. USA. Extracted from: http://www.wood-database.com/santos-mahogany/

Matweb (web site). 1996. Metals: Aluminium alloys. USA. Extracted from: http://www.matweb.com/search/datasheet_print.aspx?matguid=1b8c06d0ca7c456694c7777d9e10be5b

Campusplastics (web site). 2009. ABS: Novodur family. USA. Extracted from: https://www.campusplastics.com/campus/en/datasheet/Novodur®+P2H-T/INEOS+Styrolution/654/bef1d0db/SI?pos=13

Lamello (web site). 2010. Products. Switzerland. Extracted from: http://www.lamello.com/product/bohrenfraesen-verbinder/invis-mx2/

Make Good Wood (web site). 2017. Products. USA. Extracted from: https://www.makewoodgood.com/product/layup-laminating-epoxy/

Make Good Wood (web site). 2017. Products. USA. Extracted from: https://www.makewoodgood.com/product/oak-teak-glue-wood-glue/

This project has been supervised by the tutor Joaquín Pérez Fuster from Escuela Politécnica Superior de Alcoy (Spain) and the external tutor Jan Stolin from the Technical University of Liberec (Czech Republic).