Electric Power Systems Research 215 (2023) 109014

Contents lists available at ScienceDirect

Electric Power Systems Research

journal homepage: www.elsevier.com/locate/epsr

Measurement of power effects caused by the deterioration of the neutral conductor in three-phase distribution networks

Elisa Peñalvo López, Amparo León Vinet, Vicente León Martínez, Joaquín Montañana Romeu *, Iván Valencia Salazar

Electrical Engineering Department, Universitat Politècnica de València, Camino de Vera, 14, 46022-Valencia, Spain

ARTICLE INFO

Keywords:
Neutral conductor
Distribution networks
Neutral-point displacement voltage
Apparent power
Neutral-displacement power

ABSTRACT

The expressions of the powers that measure the effects of the energies manifested by the deterioration of the neutral conductor in low-voltage distribution networks are developed in this paper with the name of neutral-displacement powers. The expressions of these powers have been obtained by applying the Principle of Energy Conservation to the entire three-phase system and the use of Buchholz's apparent source and load powers. Contrary to the traditional apparent powers of the neutral conductor, these new powers are not affected by the neutral currents and, therefore, their expressions can be applied to analyze the effects of the neutral conductor even though this conductor has been accidentally broken or disconnected. In the application example, based on the three-phase distribution network of a real industrial estate, it has been verified that the neutral-displacement powers reach a maximum value when the neutral conductor has been broken, while the traditional apparent powers of the neutral conductor are worth zero under those conditions. This result confirms that the neutral-displacement powers are more adequate quantities than the traditional ones to measure the impact that the deterioration and disconnection of the neutral conductor can cause in three-phase distribution networks.

1. Introduction

The neutral conductor is an essential practical element in low voltage three-phase distribution networks, with unbalanced and distorted loads. Its main mission is to maintain the zero-sequence unbalance load voltage factors (ratio between the zero-sequence and the positive-sequence voltages) with values similar to those measured in the sources at the point of common coupling (PCC). The neutral conductor is also a path for the circulation of 50–60 Hz fundamental zero-sequence currents (imbalances) and with a frequency different from the fundamental (distortions).

These neutral currents gives rise to voltages between the source (N) and load (n) neutral points, which are determined according to Ohm's Law. The phenomenon that gives rise to these neutral voltages was known as neutral inversion [1,2] in the earlies 1930s. Nowadays, these phenomena are known as neutral-point displacement [3,4]. Under normal operating conditions of the neutral conductor, the neutral displacement voltages (v_{nN}) slightly increases the load voltages. However, an increase in the neutral conductor impedance, either due to wear of the connections or due to accidental breakage, gives rise to high values of the neutral-point displacement voltages [5–7], which are responsible for the presence of over-voltages and under-voltages in the loads, causing malfunctions and to putting them out of service, in the most serious cases.

The studies carried out on the neutral-point displacement phenomenon since 1930 focus only on the analysis of the previous mentioned load voltage effects [8–10]. However, few works are known in the Technical Literature that suitably address the power effects of this phenomenon. Traditionally, the neutral apparent power (S_N) defined by the product of the neutral-point displacement voltage (V_{nN}) and the neutral current (I_N) was used to determine the neutral conductor power effects. The expressions of the neutral-displacement power (S_n) and its components in the sources (S_{ns}) and loads (S_{nl}) were developed in 2017 for the first time in the Technical Literature. In our opinion, these are as more suitable quantities than the neutral apparent powers to measure the effects of the energies caused by the neutral displacement phenomenon in three-phase systems, because they do not depend on the neutral current, but on the line currents, and, therefore, can also be applied in power systems with no neutral conductor. The neutral-displacement powers were applied in monitoring the state of the

* Corresponding author.
E-mail address: jmontanana@die.upv.es (J.M. Romeu).

https://doi.org/10.1016/j.epsr.2022.109014
Received 4 February 2022; Received in revised form 5 September 2022; Accepted 19 November 2022
Available online 28 November 2022
0378-7796/© 2022 The Author(s). Published by Elsevier B.V. This is an open access article under the CC BY license (http://creativecommons.org/licenses/by/4.0/).

neutral conductor, in patent ES 2588260 B2 [11] and, subsequently, they have also been used to detect structural and accidental asymmetries (such as bar breakage and phase failure) in three-phase induction motors, in patent ES 2712350 B2 [12]. Likewise, the neutral-displacement powers allowed us to establish the causes that physically and analytically justify the different measured values of the apparent power, depending on the selected voltage reference point [13].

In this paper, the meanings of neutral conductor and neutral path are used interchangeably to designate the device that interconnects the neutral points of the source and the load in three-phase systems. Last concept is more general than the first, since the neutral path includes the two operating states of the neutral conductor, namely: the usual one (Fig. 1a), with finite value impedance, generally very small, and the accidental one (Fig. 1b), of infinite impedance, when the neutral wire is disconnected or broken.

The neutral path is the subsystem of the three-phase networks, whose operation gives rise to the energies that manifest because of the neutral displacement phenomena. In the three-phase network of Fig. 1a, the neutral conductor constitutes the neutral path. In the three-phase network of Fig. 1b, the neutral path is the open space between the neutral points of the source (*N*) and the load (*n*). In our opinion, the neutral path is a subsystem with its own entity, different from the sources (including the generator and lines) and loads. This consideration of the neutral path is necessary to adequately identify their energies and

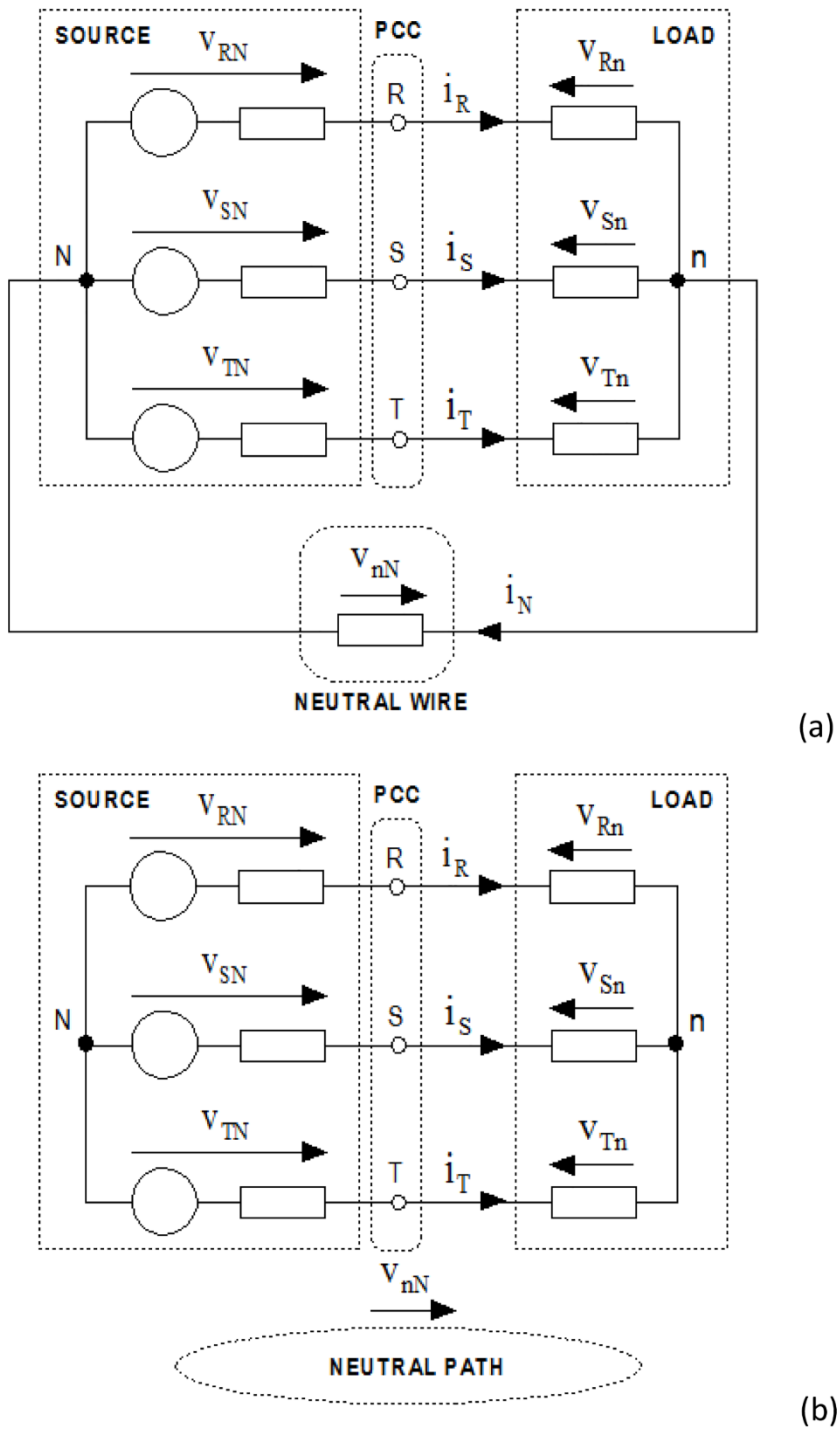

Fig. 1. Star configured three-phase systems: (a) with neutral conductor and (b) with no neutral conductor.

to correctly measure its effects.

In the second section of this paper, the energies caused by the operation of the neutral path in three-phase star-star systems are characterized by an instantaneous power, differentiated from the instantaneous source and load powers. This quantity has been called instantaneous neutral-displacement power and its expressions result from applying the Principle of Energy Conservation to the entire three-phase system.

In the third section, the expressions of the neutral-displacement power and its components are established. These powers are able to measure the effects of the energies manifested by the neutral path operation. The expressions of the neutral-displacement powers have been obtained as the squared difference between Buchholz's apparent source and load powers [14]. The neutral-displacement power components determine the exclusive effects of the neutral path operation on the sources and loads, as well as the responsibility of system imbalances and distortions in the neutral path effects.

In the fourth section, the neutral-displacement powers obtained in the previous section are applied to the power analysis of the low-voltage distribution network of an actual industrial estate, during the breaking process of the neutral conductor. The fifth section is dedicated to the conclusions.

2. Energies caused by the neutral path operation

The energies manifested by the operation of the neutral path are identified in this section by means of instantaneous power components on the three-phase systems represented in Figs. 1, with star-configured sources and loads.

The instantaneous power measured in the loads of the three-phase systems represented in Figs. 1 is expressed as follows:

$$p_l(t) = v_{Rn}\cdot i_R + v_{Sn}\cdot i_S + v_{Tn}\cdot i_T \tag{1}$$

Since instantaneous power is the quantity that defines the speed with which energy is transmitted in any subsystem, expression (1) identifies the energies present in the loads of the three-phase systems in Figs. 1.

Applying the second Kirchhoff's Law to the three-phase system of Fig. 1a, the instantaneous voltages of each phase of the source can be expressed as a function of the instantaneous voltages of each phase of the loads as:

$$v_{Rn} = v_{RN} - v_{nN}\ \ v_{Sn} = v_{SN} - v_{nN}\ \ v_{Tn} = v_{TN} - v_{nN} \tag{2}$$

where v_{nN} is the instantaneous neutral-point displacement voltage. Substituting these last equations in (1), it turns out that:

$$\begin{aligned} p_l(t) &= (v_{RN} - v_{nN})\cdot i_R + (v_{SN} - v_{nN})\cdot i_S + (v_{TN} - v_{nN})\cdot i_T \\ &= v_{RN}\cdot i_R + v_{SN}\cdot i_S + v_{TN}\cdot i_T - v_{nN}\cdot(i_R + i_S + i_T) = p_s(t) + p_n(t) \end{aligned} \tag{3}$$

The first addend of the second member of the previous equation is the instantaneous power of the source,

$$p_s(t) = v_{RN}\cdot i_R + v_{SN}\cdot i_S + v_{TN}\cdot i_T \tag{4}$$

This quantity identifies the energies present in the sources of the three-phase networks in Figs. 1. Therefore, the second addend,

$$p_n(t) = -v_{nN}\cdot(i_R + i_S + i_T) \tag{5}$$

is the instantaneous neutral-displacement power, which characterizes the energies that appear due to the operation of the neutral conductor or, in general, of the neutral path, when there is no neutral conductor.

Based on Fortescue's Theorem [15], the neutral displacement voltage can be expressed as a function of the zero-sequence components of the phase voltages of the sources (v_{RN0}) and of the loads (v_{Rn0}), as follows:

$$v_{nN} = v_{RN0} - v_{Rn0} \tag{6}$$

Substituting this equation in (5),

$$p_n(t) = (v_{Rn0} - v_{RN0})\cdot(i_R + i_S + i_T) = p_{nl}(t) - p_{ns}(t) \tag{7}$$

two components of the instantaneous neutral-displacement power are determined. The first component,

$$p_{nl}(t) = v_{Rn0}\cdot(i_R + i_S + i_T) \tag{8}$$

characterizes the energies that are manifested in the loads of the systems represented in Figs. 1, due to the operation of the neutral path. The second component of the instantaneous neutral-displacement power,

$$p_{ns}(t) = v_{RN0}\cdot(i_R + i_S + i_T) \tag{9}$$

identifies the energies that occur in the sources of these three-phase systems, due to the operation of the neutral path.

Note that the value of the sum of the line currents could have been replaced by the neutral current ($i_R + i_S + i_T = i_N$) in Eq. (5), or in subsequent ones (7), (8) and (9), as a result of applying the first Kirchhoff's Law to the neutral points of the source (N) or of the load (n) in the three-phase systems of Figs. 1. This substitution would have been correct from the mathematical point of view, but it is inadequate to identify all the energies associated with the operation of the neutral path. Indeed, whether the sum of the line currents was substituted by the neutral current in Eq. (5), this equation would be reduce to $p_n(t) = v_{nN}\cdot i_N$, which is the well-known instantaneous neutral power. This quantity has two very important restrictions:

- The first one is that it defines the active and reactive energies caused by the circulation of current through the neutral conductor, but none of its terms allows deducing the energies due to source and load imbalances and distortions, which will be established in the Sections 2.1 and 2.2.
- The second restriction is that this equation can only be applied to electrical networks with a neutral conductor, such as the one represented in Fig. 1a, but not to systems with no neutral conductor, as Fig. 1b represents.

Applying the equation $p_n(t) = v_{nN}\cdot i_N$ to the three-phase system of Fig. 1b leads to inconsistencies such that no energy caused by the neutral path is manifested in three-phase networks without a neutral conductor, since this quantity should be zero ($p_n(t) = 0$), as there is no neutral current ($i_N = 0$). This result is not only very far from reality, since it is precisely in three-phase systems without a neutral conductor where the power effects of the neutral path are stronger, but it also violates the Principle of Energy Conservation. Indeed, compliance with this Principle requires that the total energy in the set of three-phase systems in Figs. 1 be zero. This Principle is expressed in the following relationship between the instantaneous powers of the source, the load and the neutral path:

$$p_n(t) = p_l(t) - p_s(t) \tag{10}$$

If $p_n(t) = 0$, the application of Eq. (10) to the three-phase system of Fig. 1b would determine that the instantaneous source power should be equal to the instantaneous load power ($p_s(t) = p_l(t)$). Last result is not general. It is only satisfied in sinusoidal and balanced three-phase systems. However, when the systems are unbalanced and/or distorted, this result is wrong, because the load voltages (v_{Rn}, v_{Sn}, v_{Tn}) are different from the source voltages (v_{RN}, v_{SN}, v_{TN}), due to the phenomenon of the neutral-point displacement, expressed by equations (2), and, thus, the instantaneous source and load powers are different in these systems.

2.1. Energies of the neutral path in three-phase sinusoidal systems

The voltages and currents in sinusoidal three-phase networks only have fundamental frequency components. Therefore, according to For-

tescue's Theorem, the neutral-point displacement voltage in the three-phase systems represented in Figs. 1 is equal to the difference between the zero-sequence components of fundamental frequency of the source and load phase voltages,

$$v_{nN1} = v_{RN01} - v_{Rn01} \tag{11}$$

Consequently, the instantaneous neutral-displacement power in these three-phase systems can be expressed as:

$$p_{n1}(t) = (v_{Rn01} - v_{RN01})\cdot(i_{R1} + i_{S1} + i_{T1}) = p_{nl1}(t) - p_{ns1}(t) \tag{12}$$

and its load and source components are, respectively:

$$p_{nl1}(t) = v_{Rn01}\cdot(i_{R1} + i_{S1} + i_{T1}) \tag{13}$$

$$p_{ns1}(t) = v_{RN01}\cdot(i_{R1} + i_{S1} + i_{T1}) \tag{14}$$

where (i_{R1}, i_{S1}, i_{T1}) are the fundamental frequency components of the line currents.

The previous instantaneous neutral-displacement powers identify the energies that manifest, at the fundamental frequency, due to the operation of the neutral path in the three-phase systems of Figs. 1. These energies of the neutral path are caused by the imbalances of the sources and loads, since the fundamental voltages of zero-sequence, v_{RNh1} and v_{Rnh1}, are due to the imbalances.

2.2. Energies of the neutral path in three-phase non-sinusoidal systems

The voltages and currents in non-sinusoidal three-phase networks have both fundamental and non-fundamental frequency components. The neutral-point displacement voltage (v_{nN}) is determined by the zero-sequence components, at the fundamental (v_{Rn01}, v_{RN01}) and non-fundamental (v_{Rn0h}, v_{RN0h}) frequencies of the distorted voltages of the sources and loads, that is, according to Fourier's series:

$$v_{nN} = v_{nN1} + \sum_{h\neq 1}^{\infty} v_{nNz} = (v_{RN01} - v_{Rn01}) + \sum_{h\neq 1}^{\infty}(v_{RN0h} - v_{Rn0h}) \tag{15}$$

Likewise, according to Fourier's series, the fundamental frequency components (i_{R1}, i_{S1}, i_{T1}) and non-fundamental frequency or distorted components (i_{RD}, i_{SD}, i_{TD}) of the line currents satisfy that:

$$i_R = i_{R1} + i_{RD}\ i_S = i_{S1} + i_{SD}\ i_T = i_{T1} + i_{TD} \tag{16}$$

If the three-phase systems represented in Figs. 1 are non-sinusoidal, the neutral-displacement power can be expressed, based on Eq. (7), as:

$$\begin{aligned} p_n(t) &= p_{n1}(t) + p_{nD}(t) \\ &= (v_{Rnh1} - v_{RNh1})\cdot(i_{R1} + i_{S1} + i_{T1}) + (v_{Rnh1} - v_{RNh1})\cdot(i_{RD} + i_{SD} + i_{TD}) \\ &\quad + + \sum_{h\neq 1}^{\infty}(v_{Rn0h} - v_{RN0h})\cdot(i_R + i_S + i_T) \end{aligned} \tag{17}$$

where the instantaneous power $p_{n1}(t)$, expressed by Eq. (12), defines the energies of the neutral path due to the imbalances of the sources and loads, and:

$$p_{nD}(t) = (v_{Rn01} - v_{RN01})\cdot(i_{RD} + i_{SD} + i_{TD}) + \sum_{h\neq 1}^{\infty}(v_{Rn0h} - v_{RN0h})\cdot(i_R + i_S + i_T) \tag{18}$$

identifies neutral path energies caused by source and load distortions.

The load and source components of the instantaneous neutral displacement power due to distortions are, respectively, as follows:

$$p_{nlD}(t) = v_{Rn01}\cdot(i_{RD} + i_{SD} + i_{TD}) + \sum_{h\neq 1}^{\infty} v_{Rn0h}\cdot(i_R + i_S + i_T) \tag{19}$$

$$p_{nsD}(t) = v_{RN01}\cdot(i_{RD} + i_{SD} + i_{TD}) + \sum_{h\neq 1}^{\infty} v_{RN0h}\cdot(i_R + i_S + i_T) \tag{20}$$

If the three-phase systems of Figs. 1 were non-sinusoidal, but balanced, the first summand of Eqs. (17), (18), (19) and (20) does not exist.

3. Power effects of the neutral path in three-phase systems

The combined impact of all the energies present in any subsystem of an electrical network is determined by its apparent power. Nowadays, of the many expressions of apparent power known in the Technical Literature, the most important are, in our opinion, the apparent power of Emanuel [16], which is included in the IEEE Standard 1459 [17], and the apparent power of Buchholz. In this section, Buchholz's apparent power is used for determining the impact of the neutral path operation, because this quantity does not include effects of the neutral path in its expression.

The apparent load power of the three-phase networks represented in Figs. 1 is, according to Buchholz:

$$S_l = \sqrt{(V_{Rn}^2 + V_{Sn}^2 + V_{Tn}^2)\cdot(I_R^2 + I_S^2 + I_T^2)} \tag{21}$$

and the apparent source power is expressed as:

$$S_s = \sqrt{(V_{RN}^2 + V_{SN}^2 + V_{TN}^2)\cdot(I_R^2 + I_S^2 + I_T^2)} \tag{22}$$

expressions in which (V_{Rn}, V_{Sn}, V_{Tn}) and (V_{RN}, V_{SN}, V_{TN}) are the RMS values of the load and source phase voltages, respectively, and (I_R, I_S, I_T) are the RMS values of the line currents in the three-phase systems of Figs. 1.

Applying Fortescue's Theorem, the load and source voltages of the three-phase systems of Figs. 1 can be expressed, respectively, as a function of their symmetrical components as follows:

$$V_{Rn}^2 + V_{Sn}^2 + V_{Tn}^2 = 3\cdot(V_{Rn+}^2 + V_{Rn-}^2 + V_{Rn0}^2) \tag{23}$$

$$V_{RN}^2 + V_{SN}^2 + V_{TN}^2 = 3\cdot(V_{RN+}^2 + V_{RN-}^2 + V_{RN0}^2) \tag{24}$$

expressions in which the subscripts (+ , − , 0) denote the positive-, negative- and zero- sequence components, respectively, of these voltages. Substituting Eq. (23) in (21) and Eq. (24) in (22), squaring the apparent powers of the source and load and subtracting them member by member, the result is:

$$S_l^2 - S_s^2 = 3^2\cdot\left[(V_{Rn+}^2 + V_{Rn-}^2 + V_{Rn0}^2) - (V_{RN+}^2 + V_{RN-}^2 + V_{RN0}^2)\right]\cdot(I_R^2 + I_S^2 + I_T^2) \tag{25}$$

According to Fortescue's Theorem, the positive- and negative-sequence components of the source and load voltages of the three-phase systems of Figs. 1 satisfy that: $V_{Rn+} = V_{RN+}$ and $V_{Rn-} = V_{RN-}$. Therefore, the quadratic difference between the apparent powers of the load and the source is expressed as

$$S_n^2 = S_l^2 - S_s^2 = 3^2\cdot(V_{Rn0}^2 - V_{RN0}^2)\cdot(I_R^2 + I_S^2 + I_T^2) \tag{26}$$

being its value different from zero, in general, such that:

$$S_n = \sqrt{S_l^2 - S_s^2} = 3\cdot\sqrt{(V_{Rn0}^2 - V_{RN0}^2)\cdot(I_R^2 + I_S^2 + I_T^2)} \tag{27}$$

must necessarily be the apparent power of the only subsystem different from the source and the load, that is, the neutral path.

We have called this quantity (S_n) as neutral-displacement power and it determines the effects of the energies brought into play by the neutral path operation. This fact can be confirmed by the formal resemblance between equations (7), of the instantaneous neutral-displacement power ($p_n(t)$), and (27), of the neutral-displacement power (S_n). Both powers

relate the same voltages and currents, with the difference that in (7) they are instantaneous values and in (27) squares of RMS values.

The neutral-displacement power (S_n):

- is not the traditional power of the neutral conductor ($S_N = V_{nN} \cdot I_N$);
- does not depend on the flow of current through the neutral, but rather on the currents flowing through the source and load phases, so it can be used in three-phase star-configured systems with and without a neutral conductor, and
- is equal to zero only in balanced and sinusoidal three-phase networks, in which the zero-sequence source and load voltages satisfy that $V_{RN0} = V_{Rn0} = 0$.

From Eq. (27), two components of the neutral-displacement power can be firstly established. One of them,

$$S_{nl} = 3 \cdot V_{Rn0} \sqrt{\left(I_R^2 + I_S^2 + I_T^2\right)} \tag{28}$$

determines the neutral path effects on the load. The second neutral-displacement power component,

$$S_{ns} = 3 \cdot V_{RN0} \sqrt{\left(I_R^2 + I_S^2 + I_T^2\right)} \tag{29}$$

quantifies the effects of the neutral path on the source.

Note the formal similarity of these two components of the neutral-displacement power with the components of the instantaneous neutral-displacement power, expressed by Eqs. (8) and (9), which respectively characterize the energies manifested by the operation of the neutral path on the load and source of the systems represented in Figs. 1.

Voltages and currents in the source and loads of unbalanced and non-sinusoidal three-phase networks, in general, have fundamental and non-fundamental frequency components. The RMS values of the source and load zero-sequence voltages are then obtained as:

$$V_{RN0} = \sqrt{V_{RN01}^2 + \sum_{h \neq 1}^{\infty} V_{RN0h}^2} \; V_{Rnh} = \sqrt{V_{Rn01}^2 + \sum_{h \neq 1}^{\infty} V_{Rn0h}^2} \tag{30}$$

and the RMS values of the line currents,

$$I_R = \sqrt{I_{R1}^2 + \sum_{m \neq 1}^{\infty} I_{Rm}^2} = \sqrt{I_{R1}^2 + I_{RD}^2} \; I_S = \sqrt{I_{S1}^2 + I_{SD}^2} \; I_T = \sqrt{I_{T1}^2 + I_{TD}^2} \tag{31}$$

Substituting last equations in (27), (28) and (29) and separating the terms corresponding to the fundamental and non-fundamental frequencies, the expressions of the neutral-displacement powers (S_{n1}) and their components in the load and in the source at the fundamental frequency are expressed as follows:

$$S_{n1} = 3 \cdot \sqrt{\left(V_{Rn01}^2 - V_{RN01}^2\right) \cdot \left(I_{R1}^2 + I_{S1}^2 + I_{T1}^2\right)} = \sqrt{S_{nl}^2 - S_{ns}^2} \tag{32}$$

$$S_{nl1} = 3 \cdot V_{Rn01} \sqrt{\left(I_{R1}^2 + I_{S1}^2 + I_{T1}^2\right)} \tag{33}$$

$$S_{ns1} = 3 \cdot V_{RN01} \sqrt{\left(I_{R1}^2 + I_{S1}^2 + I_{T1}^2\right)} \tag{34}$$

These quantities measure the neutral path effects in unbalanced power systems, because they depend on the fundamental zero-sequence voltages (V_{Rn01}, V_{RN01}), which are zero, respectively, when sources and loads are balanced.

In the same manner, the neutral-displacement powers (S_{nD}) and its components in the load (S_{nlD}) and in the source (S_{nsD}) due to the exclusive effect of the distortions in the loads and in the sources can be expressed as follows:

$$S_{nD} = 3 \cdot \left[\begin{array}{l} \left(V_{Rn01}^2 - V_{RN01}^2\right) \cdot \left(I_{RD}^2 + I_{SD}^2 + I_{TD}^2\right) + \\ + \sum_{z \neq 1}^{\infty} \left(V_{Rn0z}^2 - V_{RN0z}^2\right) \cdot \left(I_R^2 + I_S^2 + I_T^2\right) \end{array} \right]^{\frac{1}{2}} = \sqrt{S_{nlD}^2 - S_{nsD}^2} \tag{35}$$

$$S_{nlD} = 3 \cdot \sqrt{V_{Rn01}^2 \cdot \left(I_{RD}^2 + I_{SD}^2 + I_{TD}^2\right) + \sum_{z \neq 1}^{\infty} V_{Rn0z}^2 \cdot \left(I_R^2 + I_S^2 + I_T^2\right)} \tag{36}$$

$$S_{nsD} = 3 \cdot \sqrt{V_{RN01}^2 \cdot \left(I_{RD}^2 + I_{SD}^2 + I_{TD}^2\right) + \sum_{z \neq 1}^{\infty} V_{RN0z}^2 \cdot \left(I_R^2 + I_S^2 + I_T^2\right)} \tag{37}$$

These quantities are zero in sinusoidal power systems, in which $V_{Rn0D} = V_{RN0D} = 0$ and the distorted currents are zero too.

4. Application example

The power effects caused by the deterioration of the neutral conductor of the Low Voltage distribution network of an industrial estate are analyzed in this section. The facilities of the aforementioned industrial estate are supplied by means of a Dyn11 three-phase distribution transformer, of the Ormazabal brand, with a power of 1000 kVA, transformation ratio 20 kV / 410 V and short-circuit impedance $\overline{Z}_{cc} = 0,010{,}086\angle 81{,}32^{\circ}\ \Omega$, through an asymmetrical line, of resistances in each phase: $r_1 = 0,0063\ \Omega$, $r_2 = 0{,}0026\ \Omega$ and $r_3 = 0,011\ \Omega$, being the resistance of the neutral conductor $r_n = 0,011\ \Omega$, as shown schematically in Fig. 2. There are several reactive power compensators in this electrical network, which improve the power factor to practically one. The study has been carried out based on the measurements made on the transformer secondary, at a given moment of operation of the electrical network, using a Fluke 435 Series II network analyzer.

The breakage process of the neutral conductor has been simulated using the Excel platform. The Excel program (Fig. 3) works by entering the nominal data of the transformer, the line and neutral resistances and the load impedances. The neutral-point displacement voltages (V_{nN}) existing between the load and source neutral points are determined by applying the node analysis method to a three-phase circuit as Fig. 1a represents. From this value of V_{nN}, voltages and currents in the secondary windings, in the lines and neutral wires and in the loads are calculated by the Excel program, according to the second Kirchhoff's Law and Ohm's Law.

The Excel program also provides the values of the apparent, active, reactive and neutral-displacement powers in the different subsystems of the distribution network, at the fundamental frequency (Fig. 3).

Figs. 4 represents the voltage and current waveforms recorded by the Fluke 435 Series II at the PCC. Table 1 summarizes the RMS values and the angles of these voltages and currents up to the harmonics of 600 Hz. It is noted in Table I that non-fundamental harmonics have small values and harmonics with frequencies higher than 600 Hz are still much smaller than those indicated in Table 1 and, therefore, their power effects are considered negligible. For this reason, the study presented in this Application Example focuses only on the fundamental frequency, that is, on analyzing the consequences of the deterioration of the neutral conductor with unbalanced sources and loads.

The values of the complex impedances of the load (including the reactive compensation equipment), necessaries to simulate the neutral breakdown process in the Excel platform, are summarized in Table 2 and have been obtained by applying Ohm's Law to the fundamental frequency voltages and currents of the phases, indicated in Table 1.

Figs. 5a and 5b represent the growth and decrease of the load voltages, caused by the deterioration and breakage of the neutral conductor. With a 20-fold increase in neutral conductor resistance, the voltage on phase B of the load exceeds 245 V and the load protection devices would be activated, disconnecting this phase from the source. This fact strongly affects the load imbalances, which entail an increase in the value of the

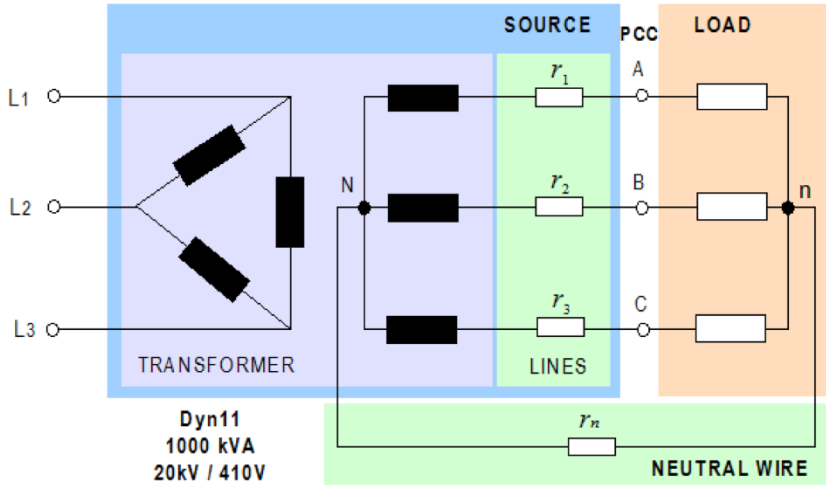

Fig. 2. Scheme of the distribution network of an industrial estate and its different subsystems.

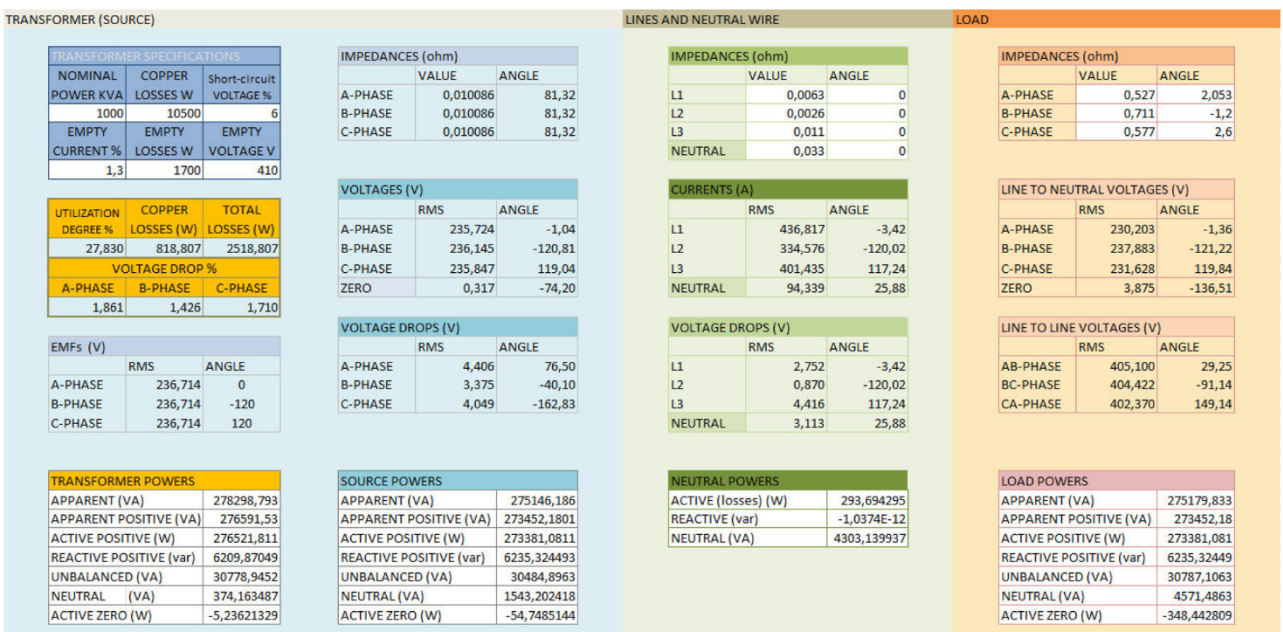

TRANSFORMER (SOURCE)

TRANSFORMER SPECIFICATIONS		
NOMINAL POWER KVA	COPPER LOSSES W	Short-circuit VOLTAGE %
1000	10500	6
EMPTY CURRENT %	EMPTY LOSSES W	EMPTY VOLTAGE V
1,3	1700	410

UTILIZATION DEGREE %	COPPER LOSSES (W)	TOTAL LOSSES (W)
27,830	818,807	2518,807
VOLTAGE DROP %		
A-PHASE	B-PHASE	C-PHASE
1,861	1,426	1,710

EMFs (V)	RMS	ANGLE
A-PHASE	236,714	0
B-PHASE	236,714	-120
C-PHASE	236,714	120

TRANSFORMER POWERS	
APPARENT (VA)	278298,793
APPARENT POSITIVE (VA)	276591,53
ACTIVE POSITIVE (W)	276521,811
REACTIVE POSITIVE (var)	6209,87049
UNBALANCED (VA)	30778,9452
NEUTRAL (VA)	374,163487
ACTIVE ZERO (W)	-5,23621329

IMPEDANCES (ohm)	VALUE	ANGLE
A-PHASE	0,010086	81,32
B-PHASE	0,010086	81,32
C-PHASE	0,010086	81,32

VOLTAGES (V)	RMS	ANGLE
A-PHASE	235,724	-1,04
B-PHASE	236,145	-120,81
C-PHASE	235,847	119,04
ZERO	0,317	-74,20

VOLTAGE DROPS (V)	RMS	ANGLE
A-PHASE	4,406	76,50
B-PHASE	3,375	-40,10
C-PHASE	4,049	-162,83

SOURCE POWERS	
APPARENT (VA)	275146,186
APPARENT POSITIVE (VA)	273452,1801
ACTIVE POSITIVE (W)	273381,0811
REACTIVE POSITIVE (var)	6235,324493
UNBALANCED (VA)	30484,8963
NEUTRAL (VA)	1543,202418
ACTIVE ZERO (W)	-54,7485144

LINES AND NEUTRAL WIRE

IMPEDANCES (ohm)	VALUE	ANGLE
L1	0,0063	0
L2	0,0026	0
L3	0,011	0
NEUTRAL	0,033	0

CURRENTS (A)	RMS	ANGLE
L1	436,817	-3,42
L2	334,576	-120,02
L3	401,435	117,24
NEUTRAL	94,339	25,88

VOLTAGE DROPS (V)	RMS	ANGLE
L1	2,752	-3,42
L2	0,870	-120,02
L3	4,416	117,24
NEUTRAL	3,113	25,88

NEUTRAL POWERS	
ACTIVE (losses) (W)	293,694295
REACTIVE (var)	-1,0374E-12
NEUTRAL (VA)	4303,139937

LOAD

IMPEDANCES (ohm)	VALUE	ANGLE
A-PHASE	0,527	2,053
B-PHASE	0,711	-1,2
C-PHASE	0,577	2,6

LINE TO NEUTRAL VOLTAGES (V)	RMS	ANGLE
A-PHASE	230,203	-1,36
B-PHASE	237,883	-121,22
C-PHASE	231,628	119,84
ZERO	3,875	-136,51

LINE TO LINE VOLTAGES (V)	RMS	ANGLE
AB-PHASE	405,100	29,25
BC-PHASE	404,422	-91,14
CA-PHASE	402,370	149,14

LOAD POWERS	
APPARENT (VA)	275179,833
APPARENT POSITIVE (VA)	273452,18
ACTIVE POSITIVE (W)	273381,081
REACTIVE POSITIVE (var)	6235,32449
UNBALANCED (VA)	30787,1063
NEUTRAL (VA)	4571,4863
ACTIVE ZERO (W)	-348,442809

Fig. 3. Screen of the Excel program for simulating the electrical network of the industrial estate.

voltage in the disconnected phase (B) and a reduction in the value of the voltages in the other two phases (A and C), as can be seen in Fig. 5b.

Fig. 6a shows the increase in the neutral-point displacement voltages (V_{nN}) between the load and source neutral points, as the neutral conductor deteriorates, as well as a decrease in the neutral current (I_N) until phase B of the load is disconnected. Fig. 6b represents the strong increase of V_{nN} and I_N caused by the load imbalances when the protection of phase B is activated, followed of a decrease of this current to zero when the neutral conductor has broken or been completely disconnected.

Figs. 7a and 7b show that the values of the neutral displacement power (S_n), obtained in the Excel program according to expression (32), evolve according to the energy effects caused by the deterioration of the neutral conductor, unlike the traditional apparent power of the neutral ($S_N = V_{nN} \cdot I_N$). Indeed, it can be seen in these figures that the values of the neutral-displacement power (S_n) are much greater than those of the apparent neutral power (S_N). Likewise, S_n increases with the deterioration of the neutral conductor, reaching a maximum value when this conductor has broken, unlike what happens with the traditional apparent neutral power (S_N), whose value is zero under these conditions. The nullification of the traditional apparent neutral power when the neutral conductor is disconnected or broken can suggest two erroneous conclusions. The first one is that there was no energy effects derived from the breakdown of the neutral conductor, contrary to what happens in practice, where power manifestations of great impact and very dangerous for the useful life of the loads are observed. The second conclusion that a value of $S_N = 0$ could suggest is that, after the breakage of the neutral conductor, the apparent source and load powers are always equal ($S_s = S_l$).

Last conclusion never occurs in industrial practice. As the three-phase networks are unbalanced and non-sinusoidal, the apparent load power is generally greater than the apparent source power ($S_l > S_s$). This fact is observed in Figs. 8 and is maintained even after the breakage or disconnection of the neutral conductor (Fig. 8b).

The gradual decrease in the values of the apparent powers of the load (S_l) and of the source (S_s), obtained according to Eqs. (21) and (22), for small damages of the neutral conductor (Fig. 8a) can be explained by the decrease in useful power (fundamental positive active power, P_+),

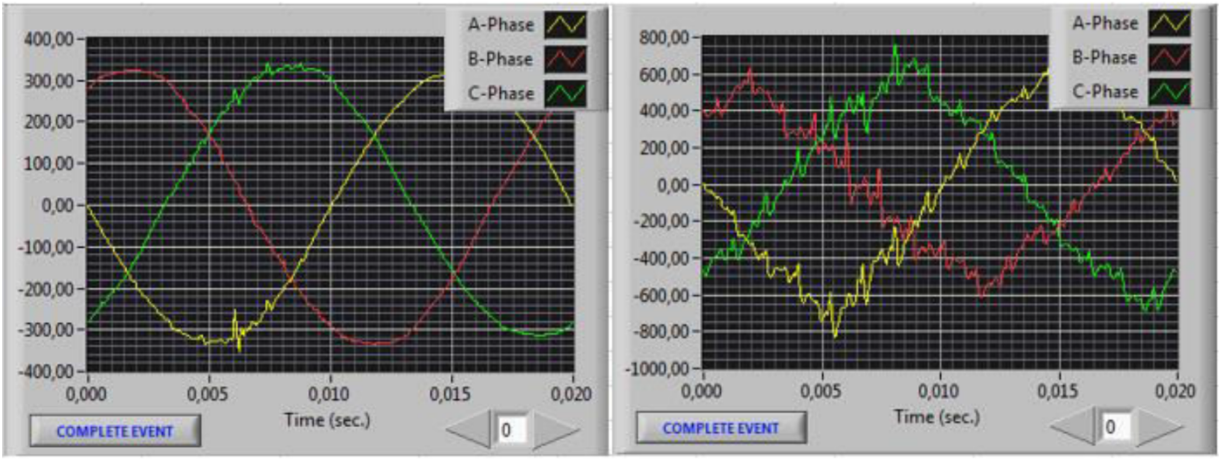

Fig. 4. Waveforms of voltages (left), in Volts, and currents (right), in Amperes, recorded by the Fluke 435 at the PCC of the distribution network, with the nominal value of the neutral conductor resistance.

Table 1
Harmonics of voltages and currents measured by the Fluke 435 at the PCC of the distribution network, with the nominal value of the neutral conductor resistance.

Freq.	Voltage A		Voltage B		Voltage C		Current A		Current B		Current C	
(Hz)	RMS (V)	Angle (°)	RMS (V)	Angle (°)	RMS (V)	Angle (°)	RMS (A)	Angle (°)	RMS (A)	Angle (°)	RMS (A)	Angle (°)
50	231.97	178.85	236.24	59.90	231.49	-59.96	440.224	176.80	332.02	61.12	401.05	-62.57
100	0.837	205.68	0.219	27.67	0.086	215.73	0.251	-88.58	0.674	214.33	1.557	-24.32
150	3.558	227.30	3.278	237.60	3.052	244.28	25.705	-25.91	17.356	-4.35	15.573	-24.24
200	0.475	-9.33	0.165	125.92	0.203	266.20	1.445	173.72	0.491	-8.42	1.603	154.88
250	0.693	-55.85	0.679	61.76	0.810	243.63	25.168	135.54	23.478	267.30	24.373	23.90
300	0.568	129.94	0.201	256.61	0.125	-22.35	2.139	255.53	0.218	228.36	3.189	263.91
350	0.956	223.35	1.893	111.80	1.665	10.15	22.12	-60.20	22.94	191.80	24.208	79.67
400	0.475	256.09	0.197	16.74	0.136	90.97	1.966	-5.44	0.253	152.60	2.812	-0.43
450	1.318	-50.10	2.109	-47.69	2.369	-31.17	1.277	-23.51	4.547	51.04	4.59	94.01
500	0.318	41.53	0.172	107.71	0.172	220.42	1.123	132.97	1.218	134.12	1.469	119.43
550	0.458	-44.36	0.164	31.46	0.226	-53.55	3.07	29.14	2.197	179.03	5.437	-19.09
600	0.277	198.14	0.127	209.99	0.229	-48.65	2.582	237.77	0.508	-62.71	2.933	248.30

Table 2
Complex load impedances at the fundamental frequency.

Z_A		Z_B		Z_C	
Module (Ω)	Angle (°)	Module (Ω)	Angle (°)	Module (Ω)	Angle (°)
0.527	2.05	0.711	-1.2	0.577	2.6

which has the same value in the load and source. However, differences between apparent load and source powers must be attributed to the neutral-displacement powers, which always satisfy $S_n^2 = S_l^2 - S_s^2$.

According to all previously commented, it follows that the neutral-displacement power (S_n), obtained according to the expressions developed in Section 3 of this paper, is a more suitable quantity than S_N for measuring the power effects caused by the operation of the neutral conductor.

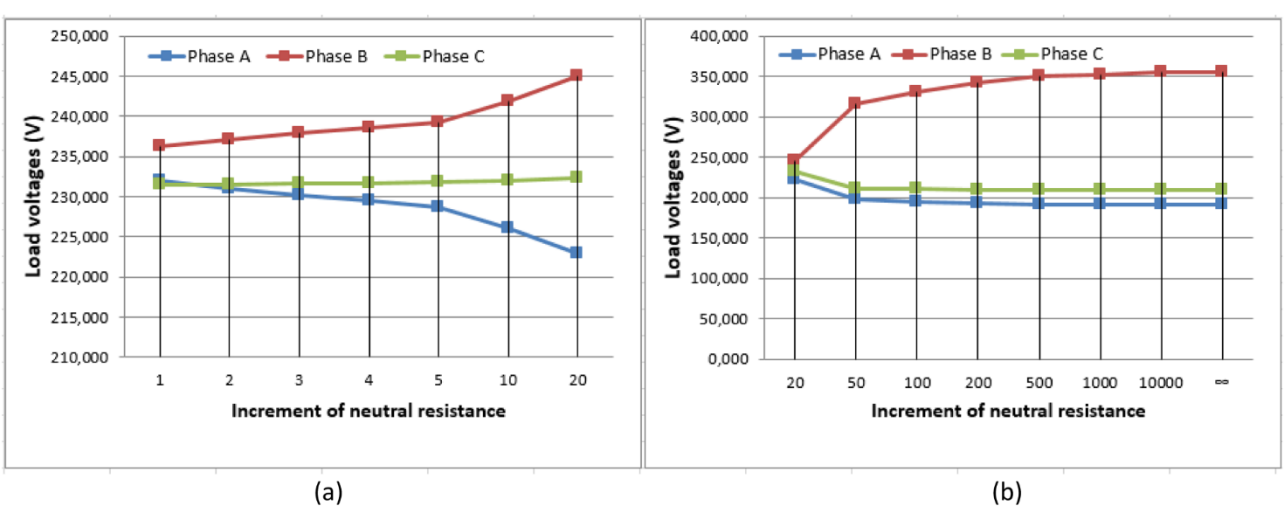

Fig. 5. Variation of the voltages in the load phases when the neutral conductor deteriorates: (a) before and (b) after the protection of phase B of the load is activated.

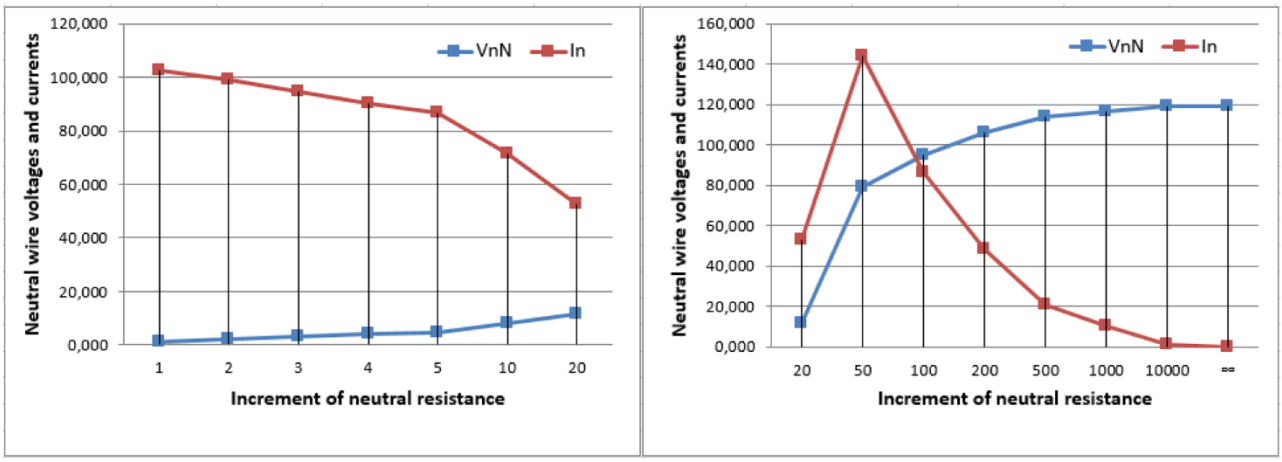

Fig. 6. Variation of the neutral-point displacement voltages, in Volts, and the neutral current, in Amperes, when the neutral conductor deteriorates: (a) before and (b) after protection of phase B of the load is activated.

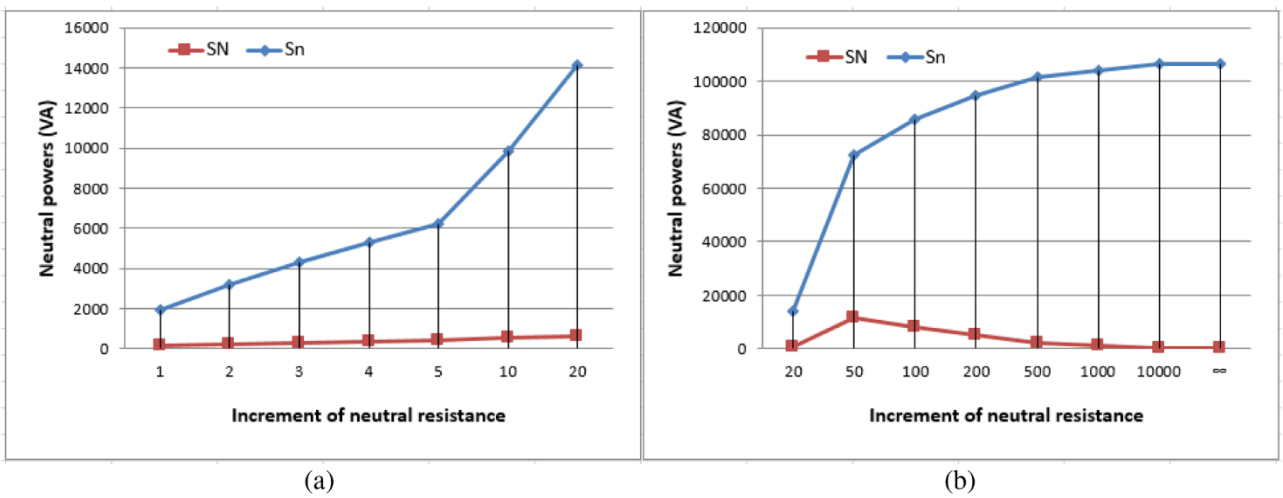

Fig. 7. Variation of the traditional apparent neutral power (S_N) and the new neutral-displacement power (S_n) in the process of breakage of the neutral conductor.

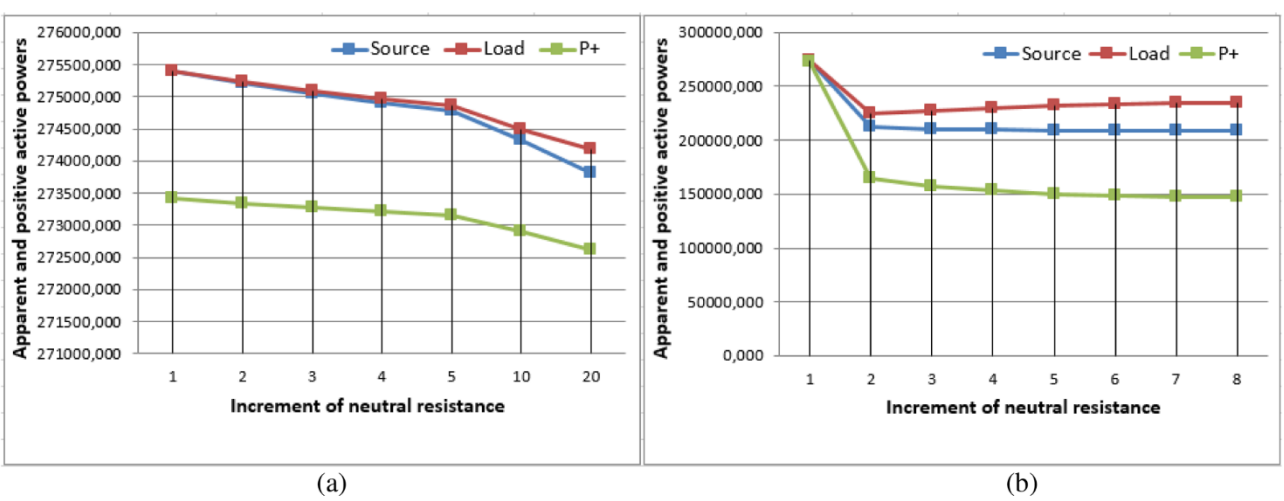

Fig. 8. Variation of the apparent source and load powers (S_s, S_l), in VA, as well as the fundamental positive-sequence active power (P_+), in W, when the neutral conductor is deteriorated: (a) before and (b) after activating the protection of the phase B of the load.

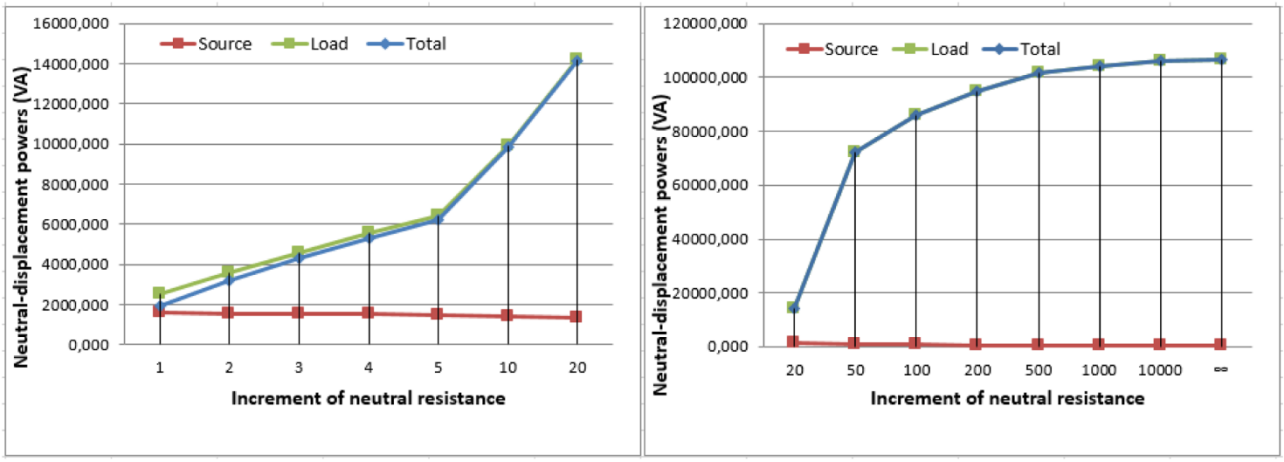

(a) (b)

Fig. 9. Evolution of the neutral-displacement power components in source (S_{ns}) and load (S_{nl}), at the fundamental frequency, after the neutral conductor deterioration: (a) before and (b) after activating the protection of the phase B of the load.

Figs. 9a and 9b represent the evolution of the fundamental component of the neutral-displacement power and its components in the source (S_{ns}) and in the load (S_{nl}), obtained according to Eqs. (32), (33) and (34). It is noted that:

- the neutral-displacement source power (S_{ns}) decreases as the deterioration of the neutral increases, which confirms the fact, well known in industrial practice, of the very small incidence of this conductor on the sources;
- the breakage of the neutral conductor, on the other hand, gives rise to strong increases in the neutral-displacement power in the load (S_{nl}). This fact has also been well known in industrial practice, but until today, it was attributed to the effect of over-voltages on the load, and now we know that it is a consequence of the energies that appear in the load due to the deterioration of the neutral conductor, which are determined by the S_{nl} component.

Likewise, it is observed in Figs. 9a and 9b that the values of the neutral-displacement power (S_n) and its load component (S_{nl}) have values very close, which is all the more evident as the deterioration of the neutral conductor increases. This fact has very important practical applications, namely:

1) the simplicity in measuring the power effects of the deterioration of the neutral conductor, which can be carried out in the loads, avoiding the difficulty of measuring in the neutral conductor itself, which is not always possible; and
2) the facility to carry out preventive maintenance of the state of the neutral conductor, monitoring only the increase in the component in the load of the neutral-displacement power (S_{nl}).

5. Conclusions

The neutral-displacement powers (S_n) and their components, developed in this paper, measure the power impacts caused by the deterioration of the neutral conductor of three-phase networks better than the traditionally used apparent neutral powers ($S_N = V_{nN} \cdot I_N$), since the neutral-displacement powers:

- Are directly related to the energies that are manifested by the deterioration of the neutral conductor, because their expressions have the same terms (products of voltages and currents) as the expressions of the instantaneous neutral-displacement powers, characteristics of these energies.
- Its expressions are independent of the neutral current, unlike what happens with the traditional apparent neutral power. For this reason, these new powers can be used to measure the power effects of the neutral conductor in each state of its operation, from its nominal conditions to its breakage or disconnection.
- Their value increases as the breakage of the neutral conductor advances and they reach their maximum value when this conductor is totally disconnected, unlike what happens with the traditional apparent neutral powers, whose value is zero in these conditions.
- Have components that determine the exclusive power effects of the deterioration of the neutral conductor on the sources and on the loads. For this reason, the use of these new powers explains why the effects of the deterioration of the neutral conductor are usually very important in the loads and are practically negligible in the sources.
- Justify the different values between the apparent powers of the sources and the loads in three-phase networks, according to the equation $S_n^2 = S_l^2 - S_s^2$.
- Enable the early detection of breaks or untimely disconnections of the neutral conductor (preventive maintenance), with great simplicity, avoiding the practical difficulties of measuring the neutral conductor itself, by measuring the neutral-displacement powers in the loads.

CRediT authorship contribution statement

Elisa Peñalvo López: Conceptualization, Writing – review & editing, Funding acquisition. **Amparo León Vinet:** Validation, Investigation, Writing – original draft. **Vicente León Martínez:** Methodology, Formal analysis, Supervision. **Joaquín Montañana Romeu:** Conceptualization, Software, Validation. **Iván Valencia Salazar:** Conceptualization, Validation, Investigation.

Declaration of Competing Interest

The authors declare that they have no known competing financial interests or personal relationships that could have appeared to influence the work reported in this paper.

Data Availability

No data was used for the research described in the article.

Acknowledgement

The work described in this paper has been sponsored and developed under the H2020 SMEmPower Projects (grant number 847132) of the European Commission and GV/2021/149, granted by the Generalitat Valenciana. Likewise, we would like to thank VINALESA DISTRIBUCIÓN DE ENERGÍA, S.L.U., for having made their distribution networks available to us to carry out the practical experiences.

References

[1] A. Boyajian, O.P. McCarty, Physical nature of neutral instability, Trans. Am. Inst. Electr. Eng. 50 (1931) 317–327, https://doi.org/10.1109/T-AIEE.1931.5055789A.
[2] B.G Gates, Neutral inversion in power systems, IET-J. Inst. Electr. Eng. 78 (1936) 317–325, https://doi.org/10.1049/jiee-1.1936.0051.
[3] International Electrotechnical Commission, Electrotechnical Vocabulary. IEC 60050-195, Part 195: Earthing and Protection, Genève, 1997.
[4] Raunig, C.; Schmautzer, E.; Fickert, L.; Achleitner, G.; Obkircher, C.; AG-Austria, Ö. I. Displacement voltages in resonant grounded grids caused by capacitive coupling. In Proceedings of the 20th International Conference and Exhibition on Electricity Distribution (CIRED 2009), Prague, Czech Republic, 8–11 June 2009. doi:10.1049/cp.2009.0692.
[5] Emanuel, A.E.; Orr, J.A. The effect of neutral path impedance on voltage and current distortion. PART I: symmetrically and balanced three-phase systems. In Proceedings of the 11th International Conference on Harmonics and Quality of Power, Lake Placid, NY, USA, 12–15 September 2004; pp. 186–190. doi:10.1109/ICHQP.2004.1409351.
[6] Emanuel, A.E.; Orr, J.A. The effect of neutral path impedance on voltage and current distortion. Part II: imbalanced three-phase systems. In Proceedings of the 11th International Conference on Harmonics and Quality of Power, Lake Placid, NY, USA, 12–15 September 2004; pp. 180–185. doi:10.1109/ICHQP.2004.1409350.
[7] Döring L., Braun B., Böhme K., et al. "Analytical calculation of the neutral point displacement voltage for high impedance earth faults in resonant earthed neutral systems". Proceedings of the CIRED 2019 Conference, Madrid, Spain, 3–6 June 2019. ISBN 978-2-9602415-0-1.
[8] C.L. Gilkeson, Jeanne, P.A. overvoltages on transmission lines, AIEE Trans. 53 (1934) 1301–1309, https://doi.org/10.1109/10.1109/EE.1935.6539678.
[9] Rocha, A.C.O.; Souza, W.M.; Mendes, J.C. Practical experiences in the analysis of abnormal voltages due to neutral instability. In Proceedings of the 2004 IEEE/PES Transmission and Distribution Conference and Exposition: Latin America (IEEE Cat. No. 04EX956), Sao Paulo, Brazil, 8–11 November 2004; pp. 952–958. doi:10.1109/TDC.2004.1432511.
[10] Kai L., Guojie X., Xiaojing G., et al. "Method for suppressing neutral point displacement overvoltage and suppression circuit in distribution network". *En: Proceedings of the 2018 China International Conference on Electricity Distribution (CICED)*, Tianjin, China, 17–19 September 2018. P. 1726–1729. doi:10.1109/CICED.2018.8592153.
[11] León-Martínez V., Montañana-Romeu J. Método y dispositivo para la determinación del estado del conductor neutro. Oficina Española de Patentes y Marcas. Patente Española. ES 2588260 B2. 2017-07-09.
[12] León-Martínez V., Montañana-Romeu J., Peñalvo-López E. Procedimiento y sistema de puesta en práctica de dispositivos de vigilancia y protección frente a fallo de fase y falta de simetría en motores de inducción trifásicos. Oficina española de Patentes y Marcas. Patente española. ES 2712350 B2. 2019-09-05.
[13] V. León-Martínez, J. Montañana-Romeu, E. Peñalvo-López, et al., Effects of the selected point of voltage reference on the apparent power measurement in three-phase star systems, Appl. Sci. (MDPI) 10 (3) (2020) 1–22.
[14] F. Buchholz, Die drehstrom scheinleistung bei ungleichmas-siger belastung der drei zweige, Licht Und Kraft 2 (1922) 9–11.
[15] Fortescue, C.L. "Method of symmetrical coordinates applied to solution of poly-phase networks". In Proceedings of the 34th Convention of American Institute of Electrical Engineers, Atlantic City, NJ, USA, 28 June 1918. doi:10.1109/T-AIEE.1918.4765570.
[16] A.E Emanuel, Power Definitions and the Physical Mechanism of Power Flow, IEEE Press, John Wiley & Sons Ltd, New York (USA), 2010, https://doi.org/10.1002/9780470667149, 264 p. ISBN 978-0-470-66074-4.
[17] IEEE, Trial Use Standard For the Measurement of Electric Power Quantities under Sinusoidal, Non-sinusoidal, Balanced or Unbalanced Conditions, IEEE Power and Energy Society, New York (USA), 2010. IEEE Standard 1459-2010.