INGENIERÍA DE DISEÑO INDUSTRIAL Y DESARROLLO DE PRODUCTO

TRABAJO FINAL DE GRADO

Diseño industrial aplicado al interiorismo, mobiliario y producto

Valencia, Junio 2017

ALUMNA
Julia Catalán Hernández
DIRECTORA
Teresa Magal Royo
CODIRECTOR:
Mark McGrath

ÍNDICE

Retail (INTE2002)

Diseño completo del interior de una tienda empleando el programa SketchUp y realización de planos mediante AutoCad.

Contract Furniture (FURN2002)

Diseño de una lámpara infantil desde la fase conceptual, especificaciones técnicas del mismo y ejecución de planos empleando el programa SolidWorks.

Comfort (FURN3003)

Diseño de un asiento modular desde la fase conceptual, especifaciones técnicas del mismo y ejecución de planos empleando el programa SolidWorks.

Flexible Living (FURN2001)

Diseño de un mueble para espacios reducidos desde la fase conceptual, especificaciones técnicas del mismo y ejecución de planos empleando el programa SolidWorks.

Product Visualisation (PDVS3411)

- ASSESSMENT 1: Realización de un portfolio con información y fotografías relevantes de un lugar turístico de Dublin utilizando el programa InDesign.
- ASSESSMENT 2: Realización de un folleto informativo sobre una herramienta de taller con InDesign, incluyendo renders de alta calidad realizados con el programa SolidWorks Visualize.

RETAIL

INTE2002

Seri
shop

index

1. Introduction ans first sketches

2. Dominant shapes

3. Stairs and modules organization

4. Intermediate modules and storage

5. Ceiling and lighting

6. Merchandising and window

7. Plans

8. Renders and materials

introduction and first sketches

The purpose of this project is to design the interior of a store, based on a predetermined form.
In order to achieve it in a simple and original way, it has been inspired in the organic forms of nature.
It has gone to the Botanic Gardens (Dublin) and looked for leaves of plants that, by asimplification process of the initial form, could serve as main and secondary module in the construction of the interior of the store.
In addition, the shape obtained through the simplification process, can be replicated in a modular way in the intermediate furniture and the ceiling, as in other areas and storage elements of the store.

dominant shapes

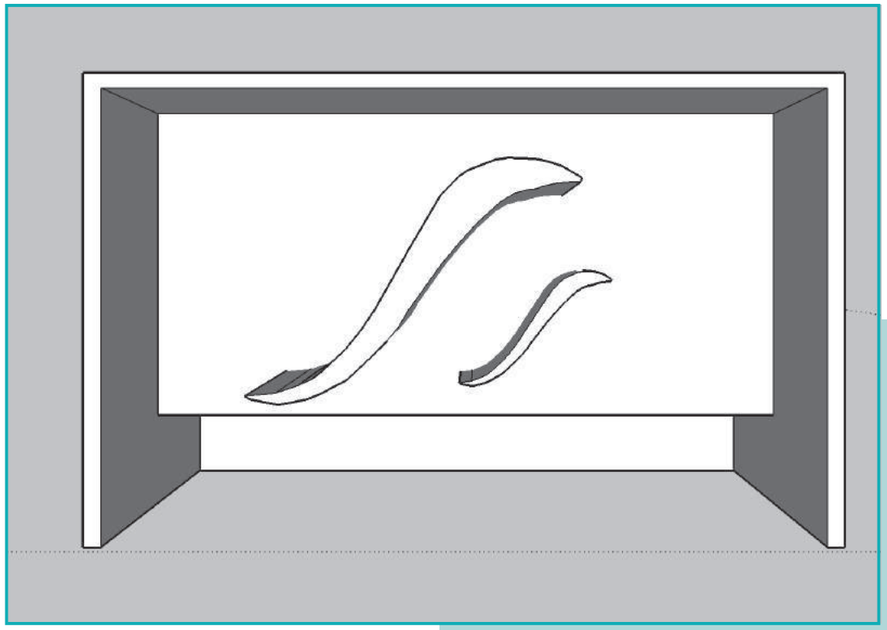

From the sketches that were made of the plants, the shapes became simpler and more stylized.
Subsequently, they were vectorized and modeled in three dimensions in Sketchup.
Also the part of the wall was constructed to have a dimensional idea of the store taking into account the plans gived.
The shape obtained after the sketching process and once modeled in Sketchup, was extruded to build the main and secondary module, which constitute the stairwell and the main and central walls of the store.

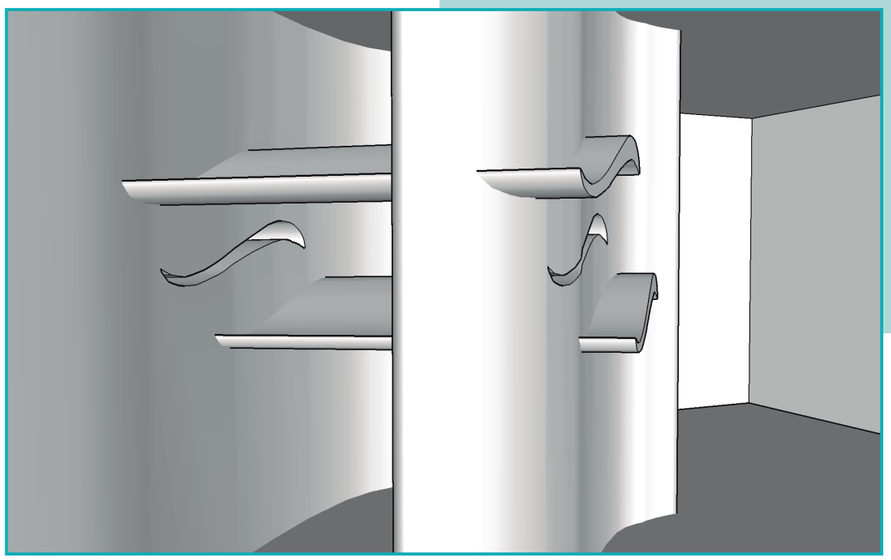

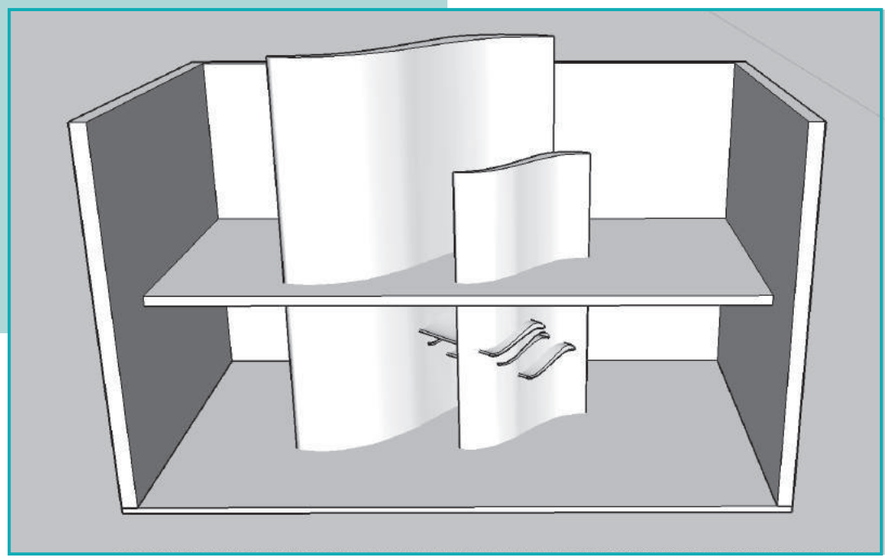

stairs and modules organization

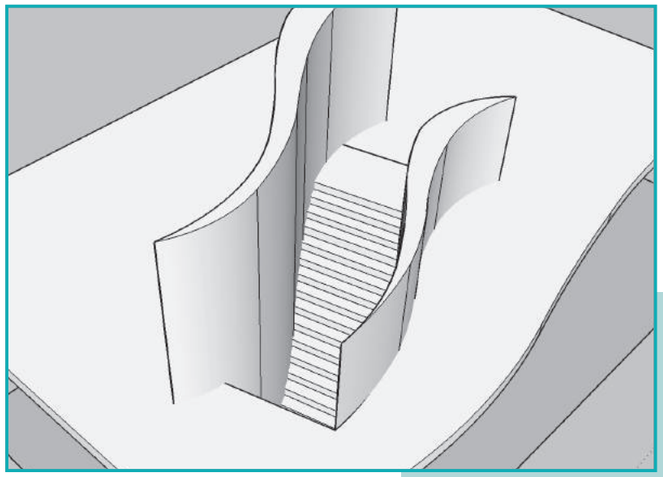

Taking advantage of the gap generated with the extruded modules, the ladder has been introduced.
Both, at the bottom and at the top, have been taken into account to leave a wider rest area than the conventional steps.
All steps have the standard measures of depth and height.
In the part of the ground that differentiates the upper part of the inferior, one has repeated the form of the curve of the main module.

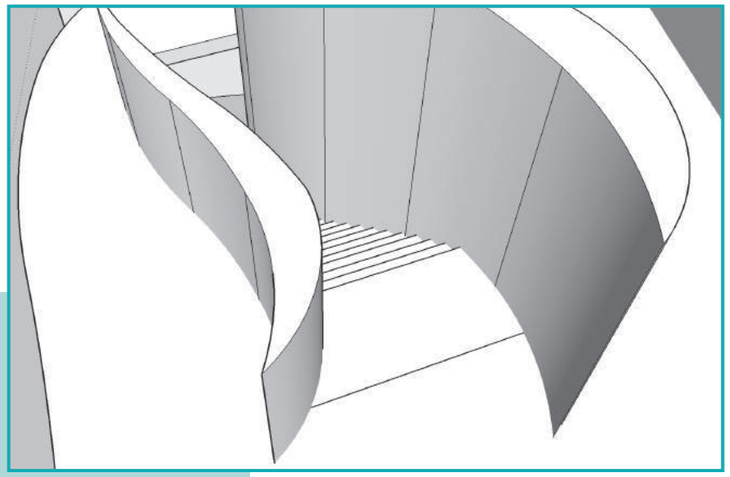

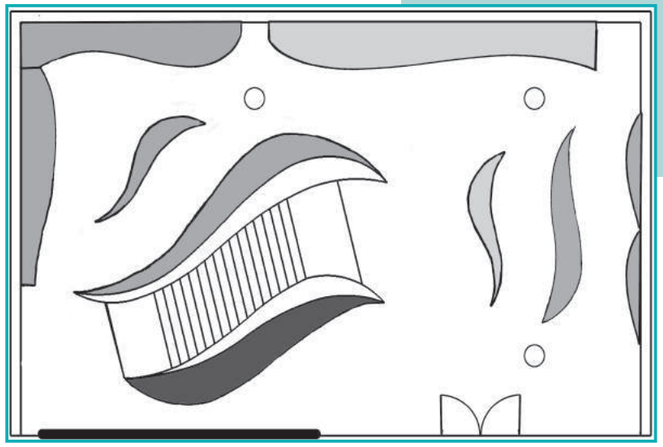

Both in the upper and lower parts have been organized modules and shelves that will contain clothes, cosmetics and accessories.
There are two floors, the lower (female) and the upper (male).
Also the main way containers of objects for the store have been designed.
Everything has been resized and the position of the columns, windows and door have been taken into account.

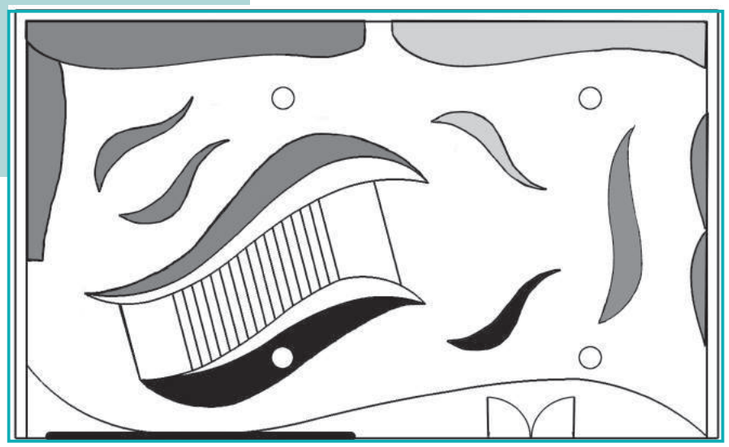

intermediate modules and storage

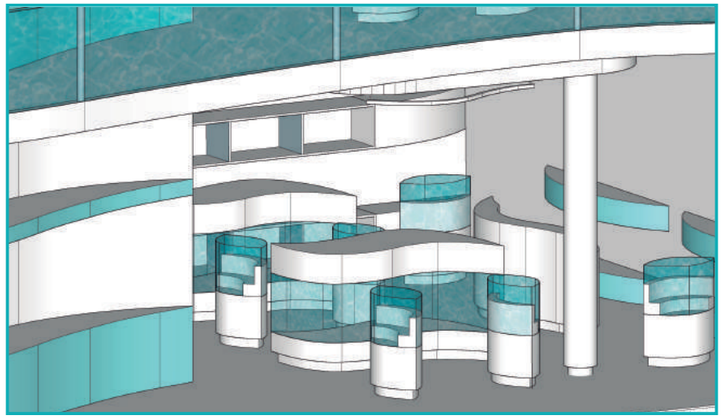

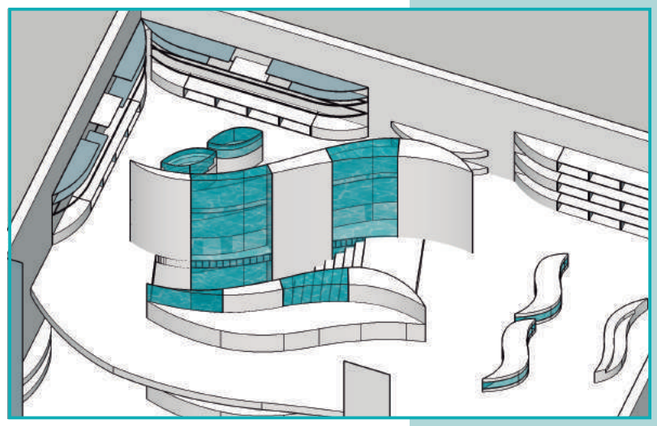

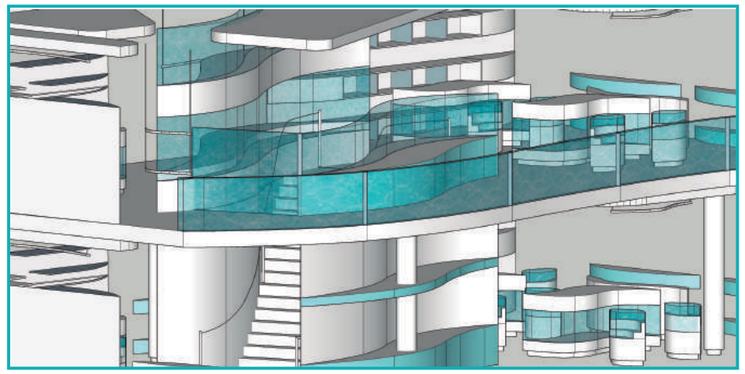

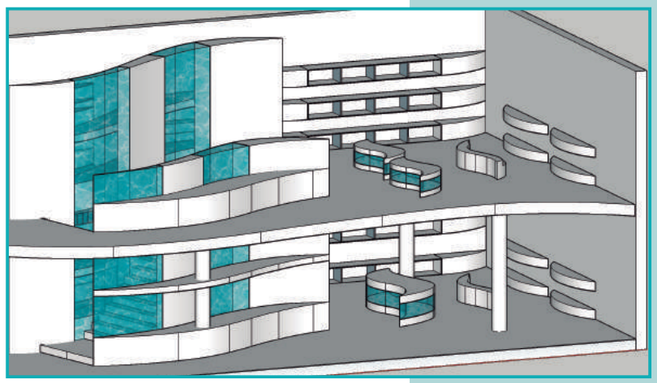

To organize the objects that are going to be in store, different types of storage have been proposed.
The modules attached to the wall are reused throughout the central area and left. Auxiliary wall modules have been placed to put on top of them the mannequins.
These same modules are also repeated by the back of the area where the counter and cash register are located.
On both sides of the walls that delimit the stairwell have been added benches and shelves to place objects and as a resting area.
What is more, different intermediate modules have been added with display case and transparent material in the central part.
It has begun to experiment with colors and materials.

ceiling and lighting

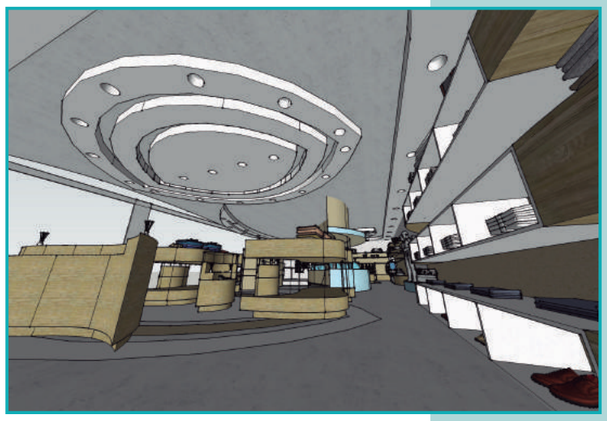

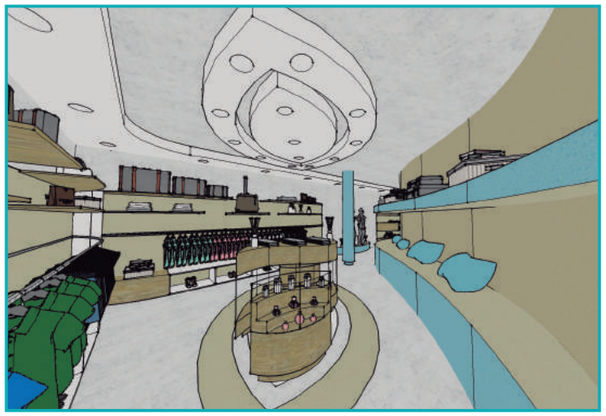

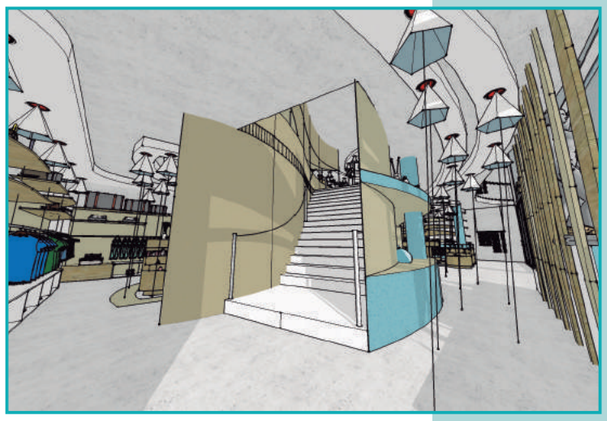

The ceiling design is based on the curves of the main shape.
There are different areas in which different forms on the roof are appended.
The part of the wall has a linear roof shape, while the intermediate modules have a shape in the rolled roof.
In all cases a spot light has been used repeatedly throughout the store.
It has been added a railing to the staircase and some colors and materials.
In the part of the floor has been projected the shape of the ceiling to delimit each one of the zones of the store and different materials have been added to this part.

merchandising and window

In all the modules, both in the wall and in the central, the corresponding objects have been placed.
In the upper floor have been placed the male clothes, accessories and cosmetics, and in the inferior the female ones.
In the upper shelves that are glued to the modules that delimit the stairwell have been added trip accessories, decoration and magazines.
In some cases, these elements have also been added in the wall modules aswell.
A brand has been designed, as well as all the graphics that accompanies it, and it has been placed in strategic areas of the store and also in the entrance.
It has been designed the entrance and the main showcase that is in the window, placing the most colorful and significant elements on it.

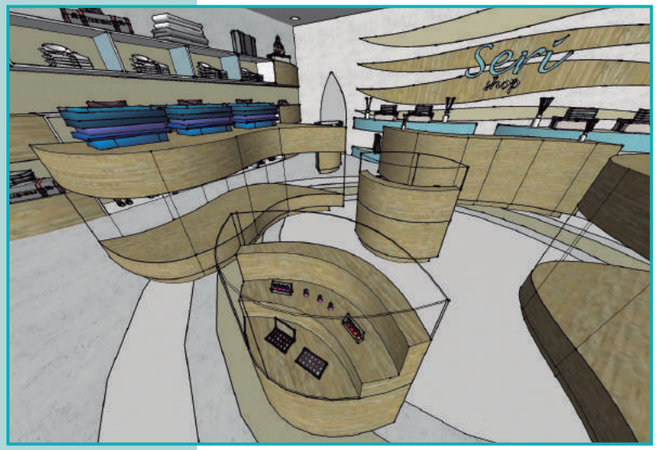

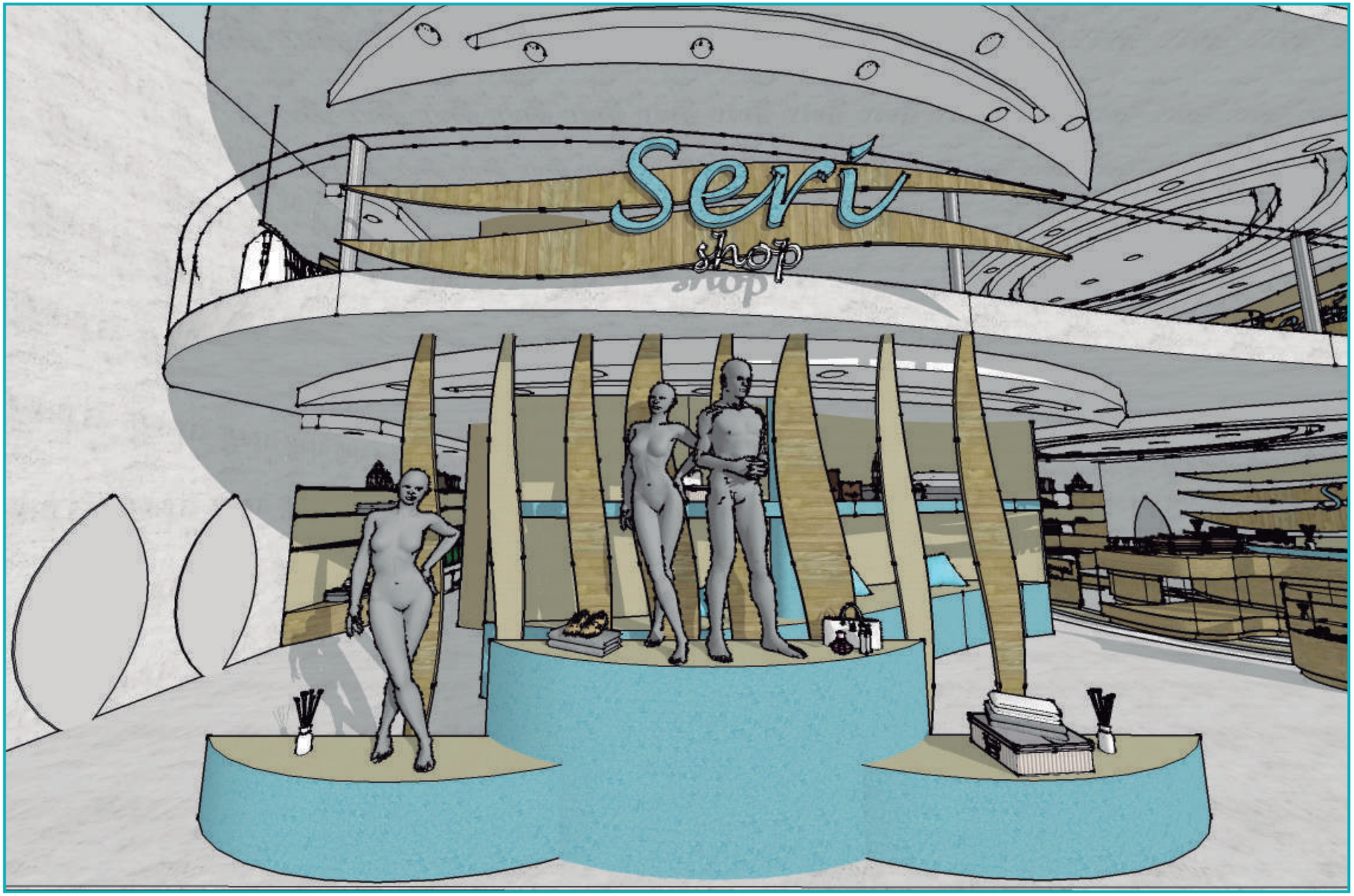
Seri
shop

plans

FRONT VIEW

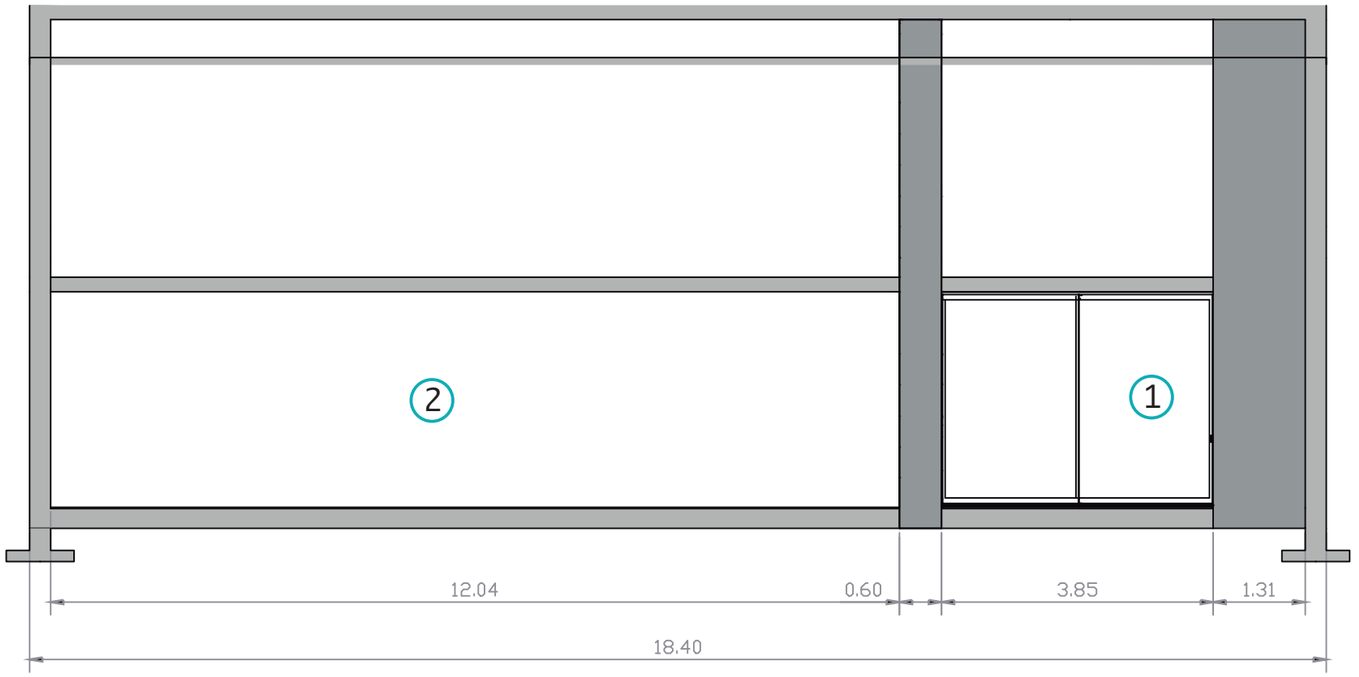

legend

1. Main door
2. Window
3. Balustrade
4. Dominant shape
5. Shopfront

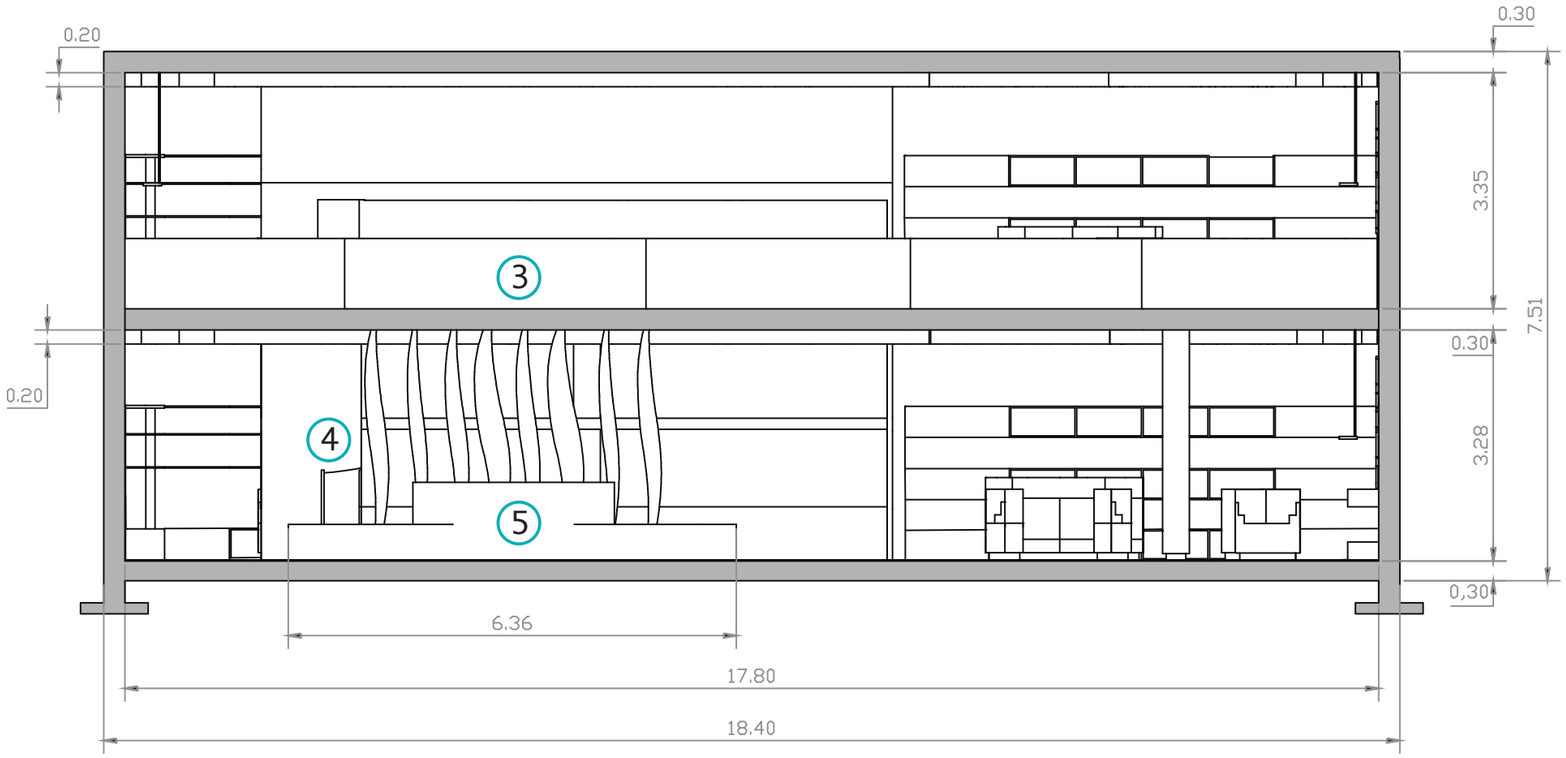

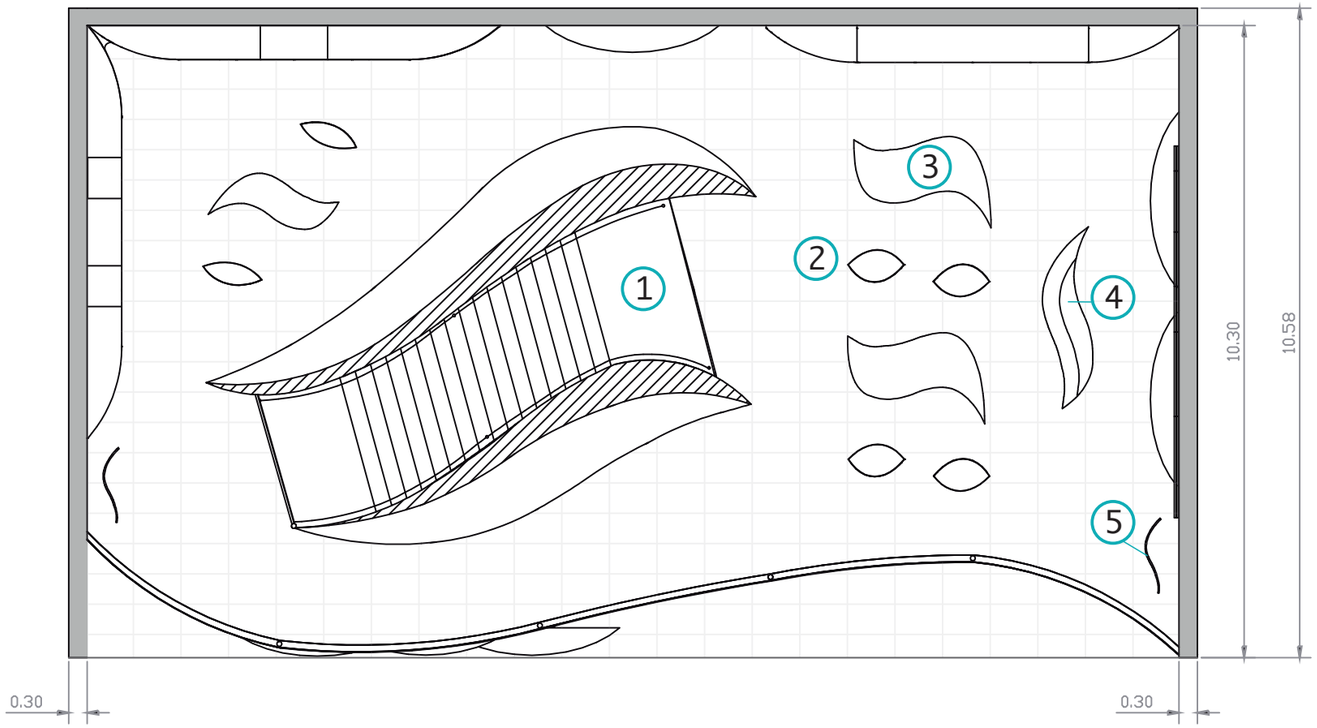

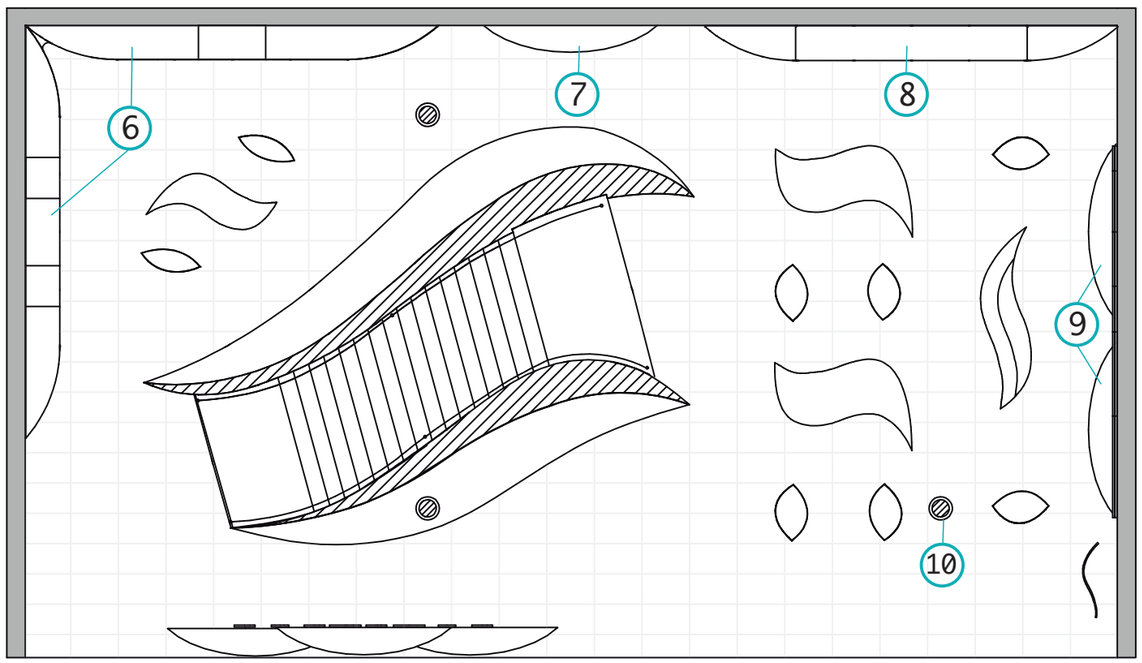

SUPERIOR VIEW

legend

1. Stairs

2. Little midle modules
   Cosmetics
   Accessories

3. Big middle modules
   Clothing and shoes

4. Cash desk

5. Pendant middle module
   Suits
   Coats

6. Wall modules
   Accessories
   Clothing
   Shoes

7. Manequins

8. Wall modules
   Accessories
   Clothing
   Shoes

9. Graphics and catalogs

10. Columns

Sarii

renders and materials

GROUND FLOOR

legend

1. Formica laminated white and brown
2. Glass
3. Grey concrete
4. Laminated wood
5. Blue quartz
6. Mirror
7. White quartz
8. Spot lights

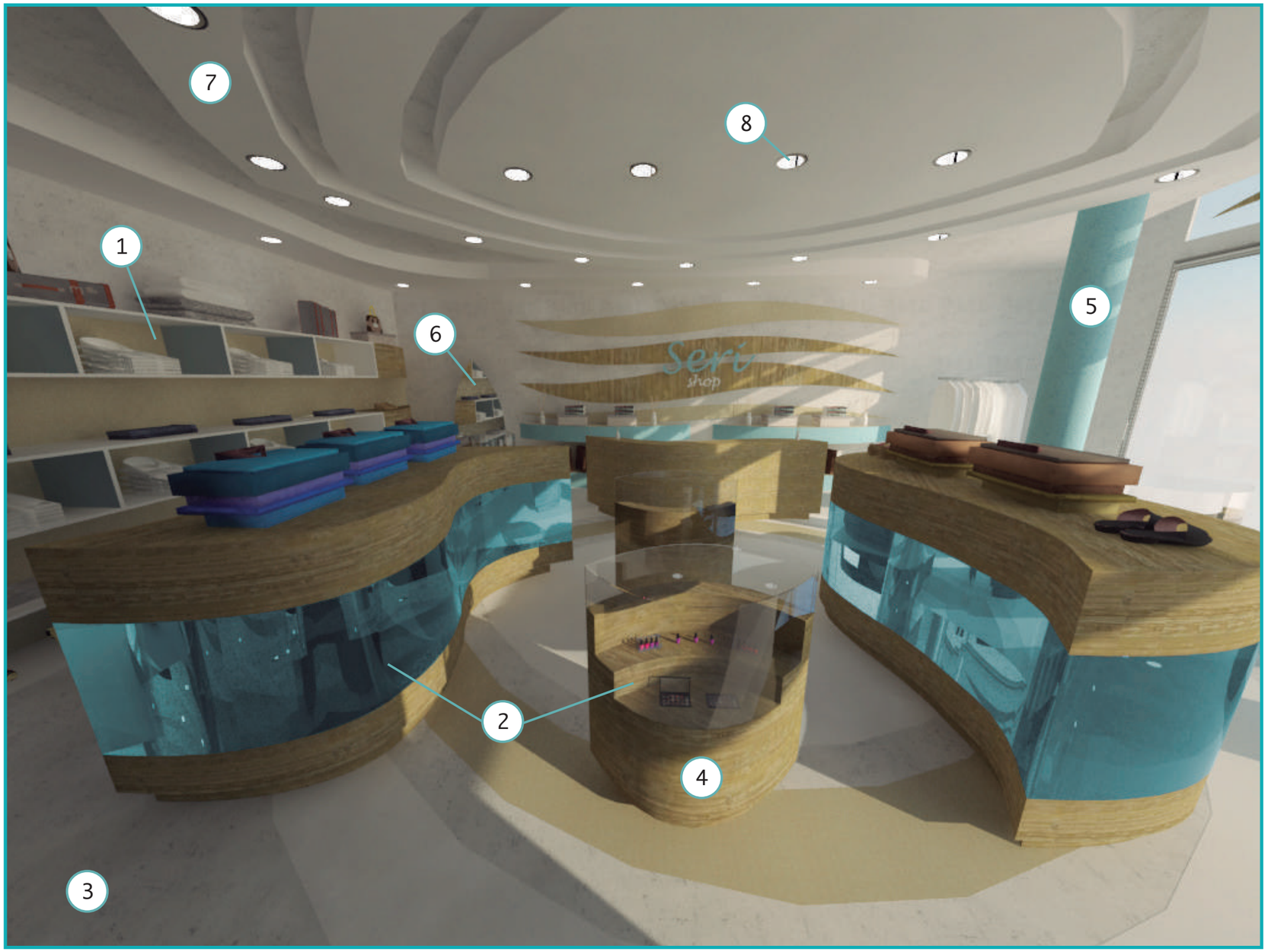

Seri
shop

renders and materials

FIRST FLOOR

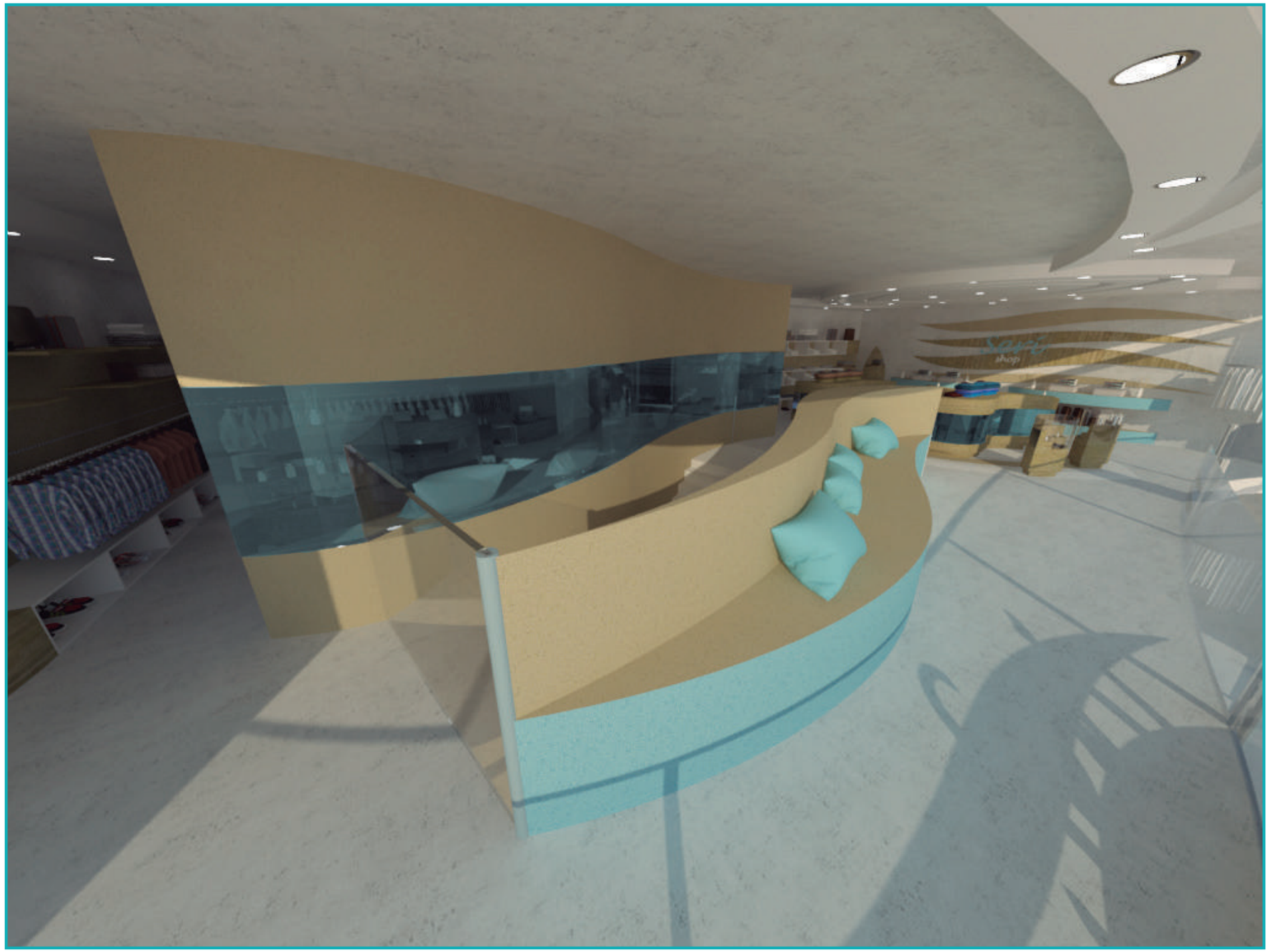

Seri
shop

renders and materials

EXTERIOR

Seri
shop
Seri
Seri
shop

Julia Catalán Hernández
RETAIL PROJECT
Neville Knott

CONTRACT FURNITURE

FURN2002

BOARD

lighting

Julia Catalán Hernández
LIGHTING - DIT
Robert Tully

conceptual design

CONCEPTS

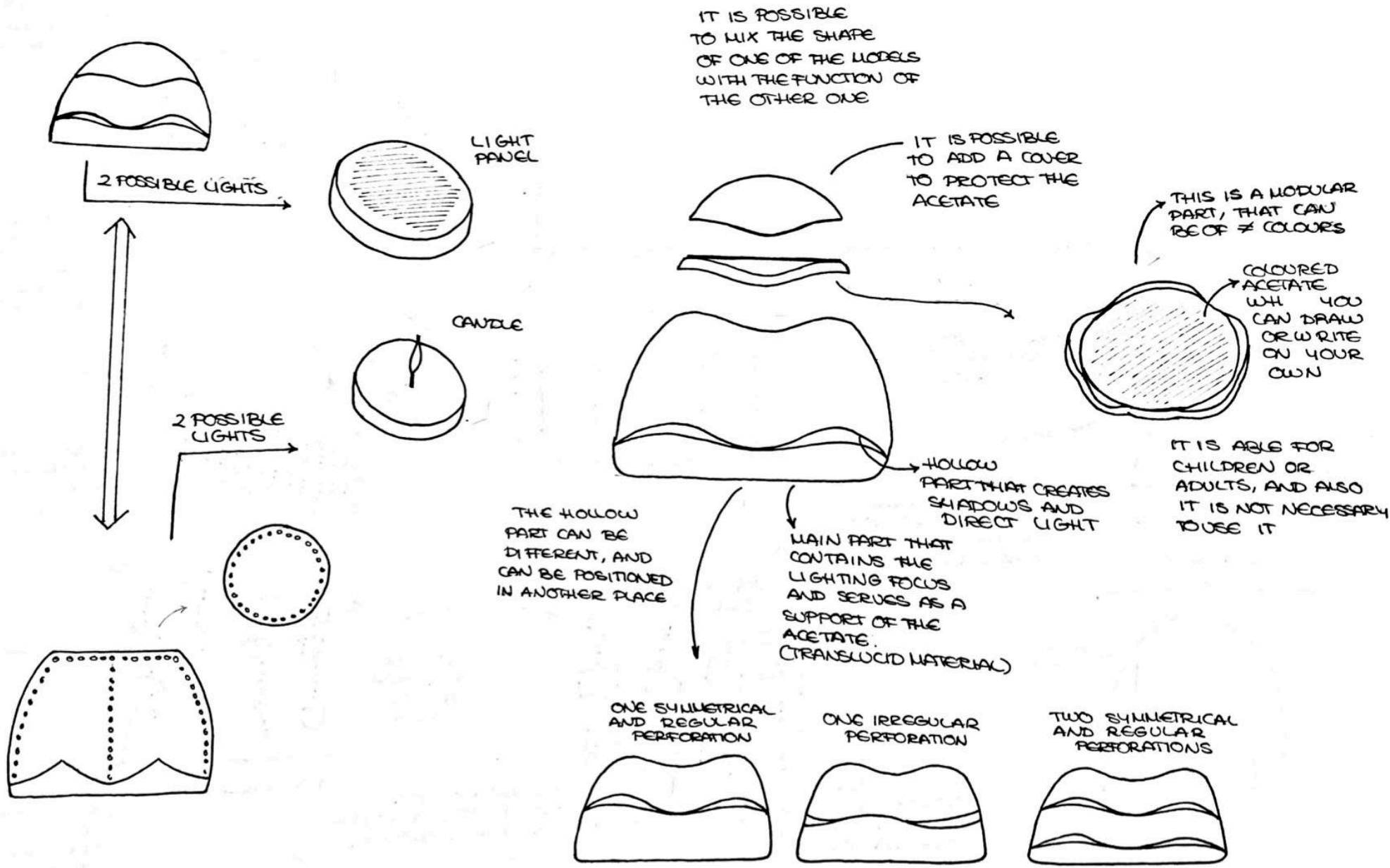
2 POSSIBLE LIGHTS
LIGHT PANEL
CANDLE
2 POSSIBLE LIGHTS
IT IS POSSIBLE TO MIX THE SHAPE OF ONE OF THE MODELS WITH THE FUNCTION OF THE OTHER ONE
IT IS POSSIBLE TO ADD A COVER TO PROTECT THE ACETATE
THIS IS A MODULAR PART, THAT CAN BE OF ≠ COLOURS
COLOURED ACETATE WH YOU CAN DRAW OR WRITE ON YOUR OWN
IT IS ABLE FOR CHILDREN OR ADULTS, AND ALSO IT IS NOT NECESSARY TO USE IT
HOLLOW PART THAT CREATES SHADOWS AND DIRECT LIGHT
THE HOLLOW PART CAN BE DIFFERENT, AND CAN BE POSITIONED IN ANOTHER PLACE
MAIN PART THAT CONTAINS THE LIGHTING FOCUS AND SERVES AS A SUPPORT OF THE ACETATE. (TRANSLUCID MATERIAL)
ONE SYMMETRICAL AND REGULAR PERFORATION
ONE IRREGULAR PERFORATION
TWO SYMMETRICAL AND REGULAR PERFORATIONS

plans and annotations

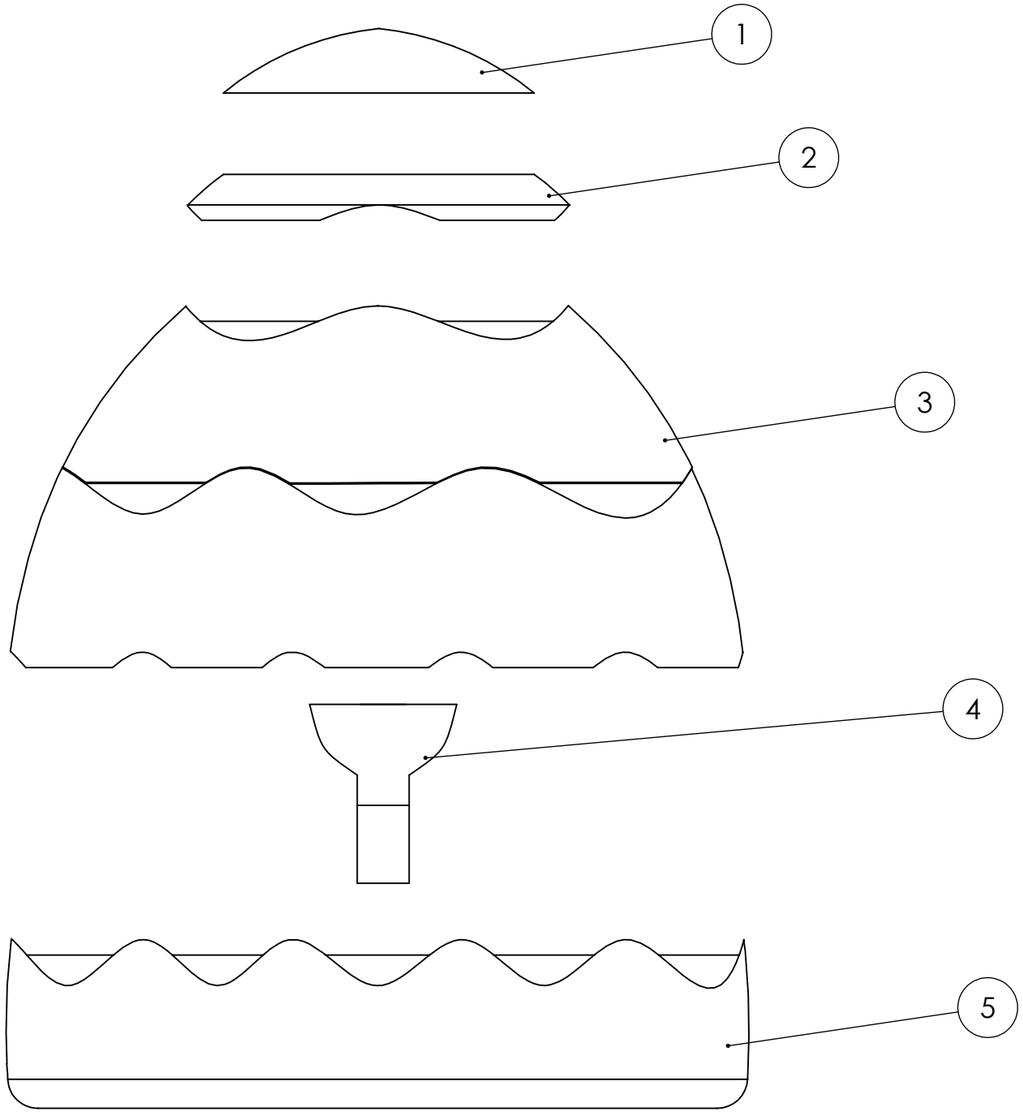

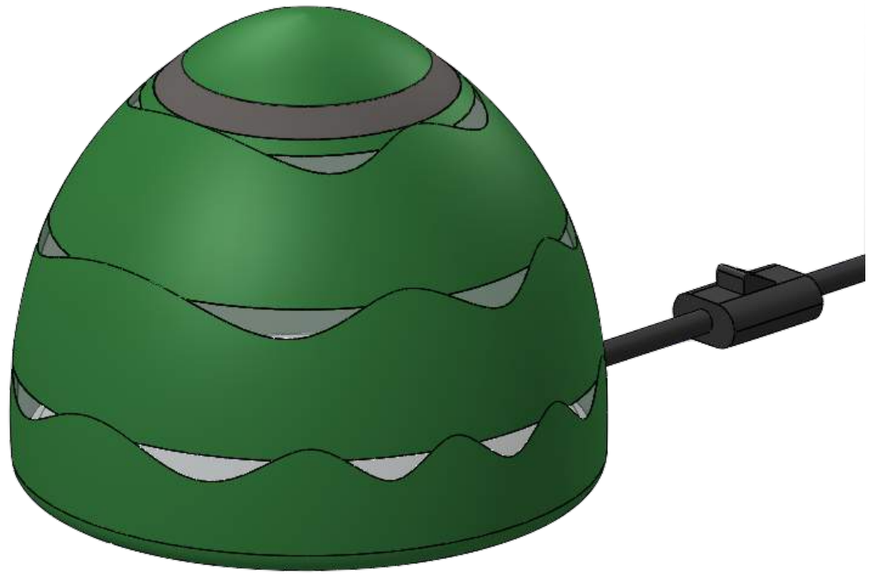

OBSERVATIONS: All rigid PVC parts are made with injection molding.

Number	Name	Quantity	Material
5	Inferior part	1	Rigid PVC
4	Bulb light set	1	LED
3	Middle part	1	Rigid PVC
2	Transparent screen set	1	Rigid and flexible PVC
1	Tap	1	Rigid PVC

Julia Catalán Hernández	Lighting - Robert Tully
GLOBAL PLANS	Sheet 1/8
Lighting project	A3

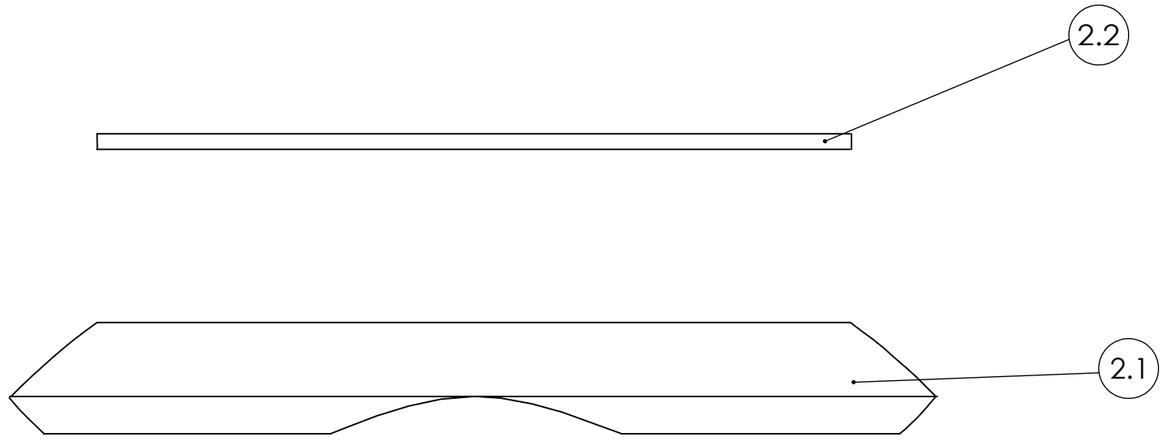

OBSERVATIONS: It is possible to personalize the Transparent screen, drawing or writing things inside. After that it is necessary to lock it in the base. When it is something drawn in the transparent screen, it is projected in the ceiling due to the light.

Number	Name	Quantity	Material
2.2	Base	1	Rigid PVC
2.1	Transparent screen	1	Flexible PVC

Julia Catalán Hernández	Lighting - Robert Tully
Screen set	Sheet 2/8
Lighting project	A3

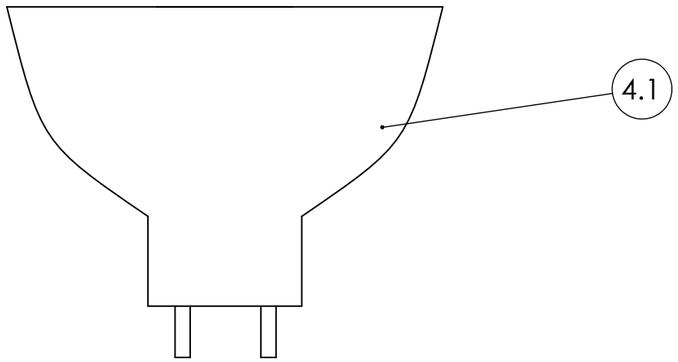

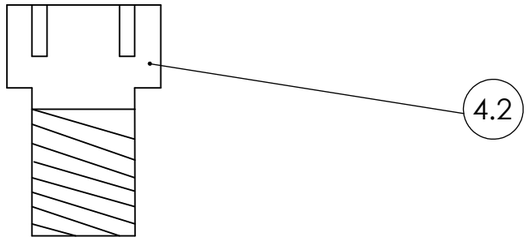

OBSERVATIONS: This bulb is the GU10 LED.

Number	Name	Quantity	Material
4.2	Inferior part	1	GU10 LED
4.1	Superior bulb	1	GU10 LED

Julia Catalán Hernández	Lighting - Robert Tully
Bulb light set	Sheet 3/8
Lighting project	A3

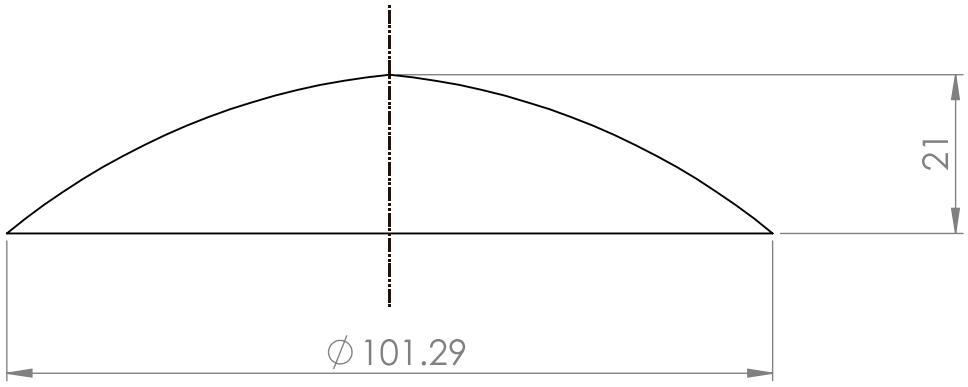

Revolution part
Thickness: 3mm

Julia Catalán Hernández		Lighting - Robert Tully
Tap		Sheet 4/8
Scale 1:1	Lighting project	Component number: 1
mm		Quantity: 1

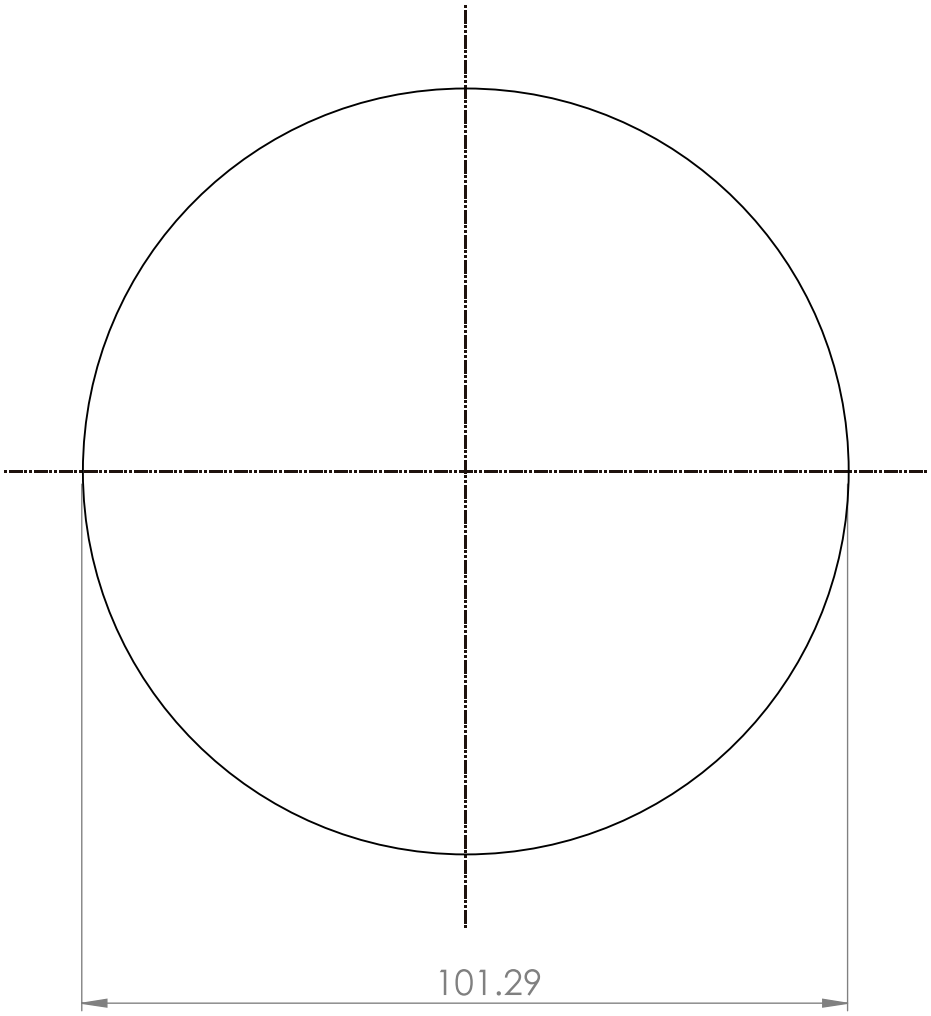

Thickness: 2mm

Julia Catalán Hernández	Lighting - Robert Tully
Transparent screen	Sheet 5/8

Scale 1:1	Lighting project	Component number: 2.1
mm		Quantity: 1

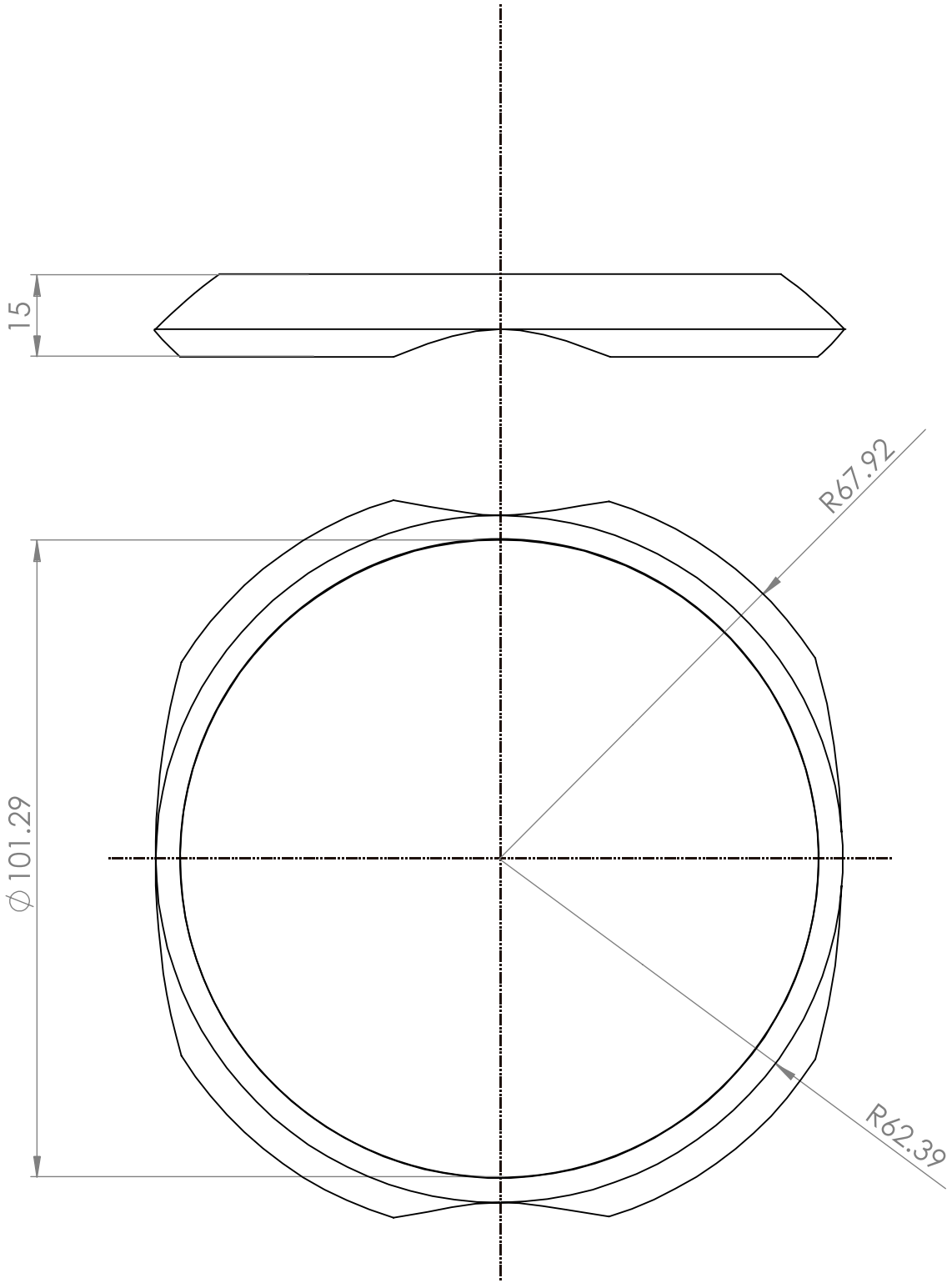

Julia Catalán Hernández	Lighting - Robert Tully
Base	Sheet 6/8

Scale 1:1	Lighting project	Component number: 2.2
mm		Quantity: 1

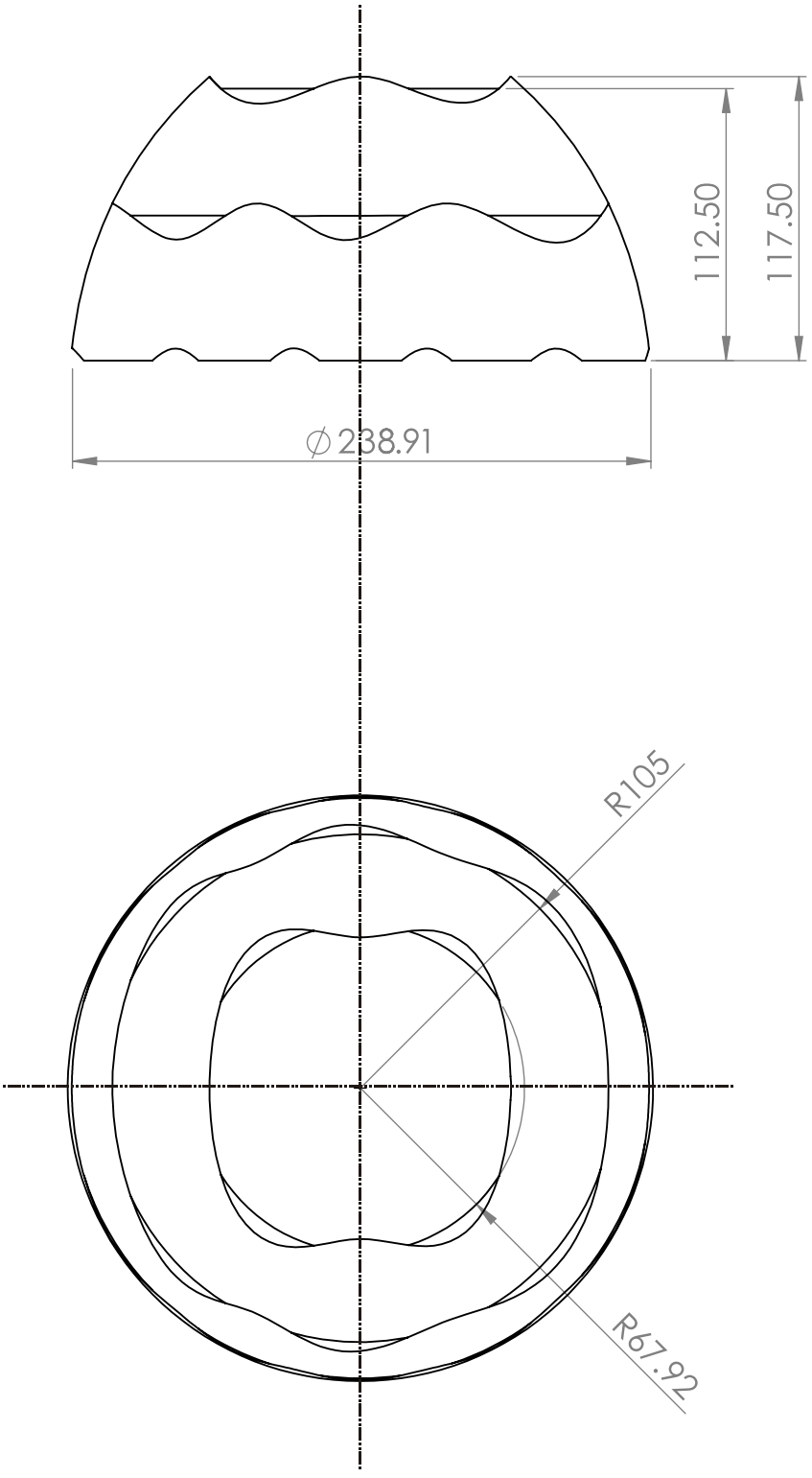

Julia Catalán Hernández	Lighting - Robert Tully
Middle part	Sheet 7/8
Scale 1:3	Component number: 3
mm	Quantity: 1

Lighting project

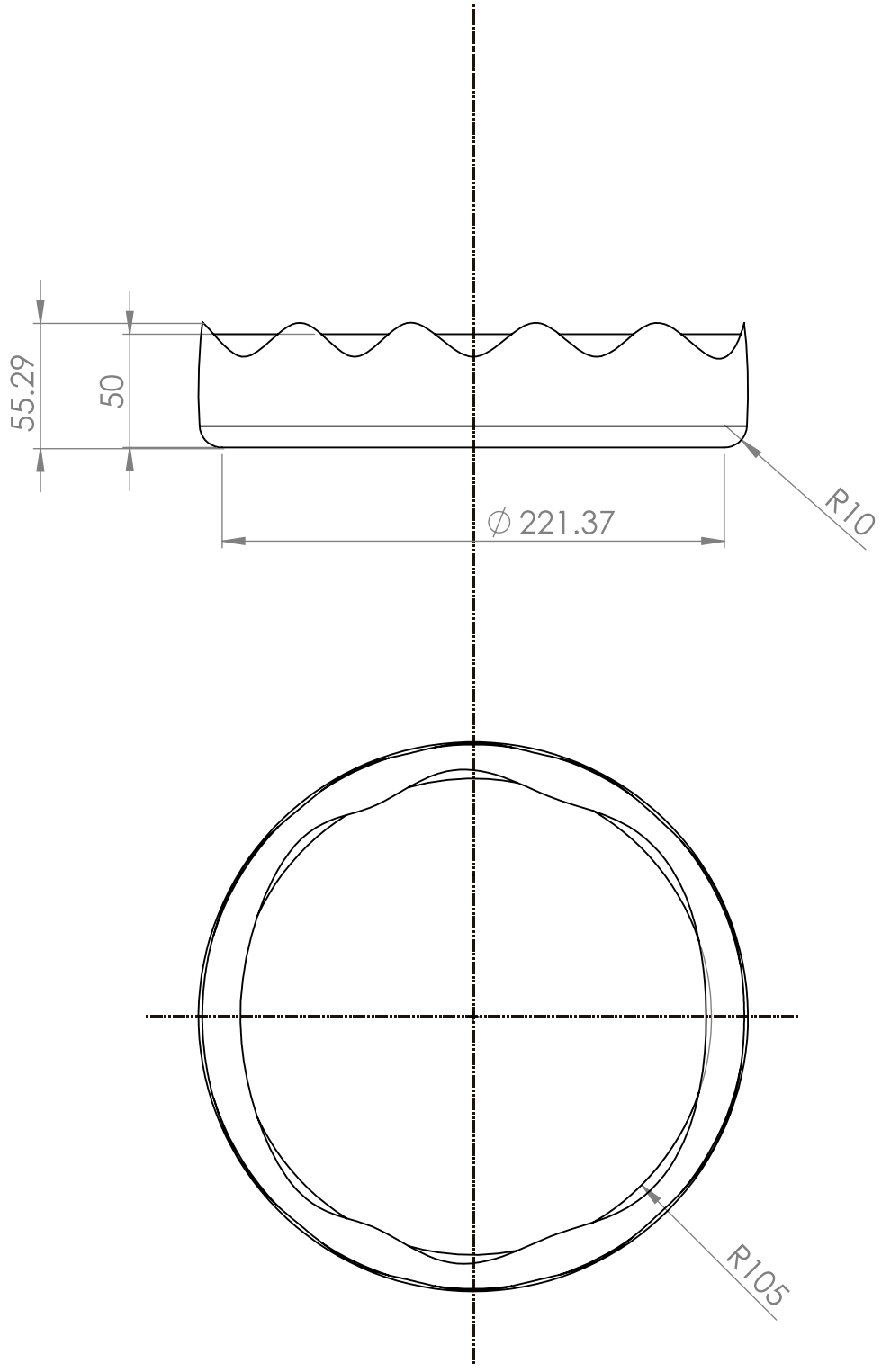

Julia Catalán Hernández	Lighting - Robert Tully
Inferior part	Sheet 8/8

Scale	Lighting project	Component number: 5
mm		Quantity: 1

ANNOTATIONS:

1. The all PVC plastic parts are made by injection molding.

2. There are two different types of translucid plastic; the smaller parts are more translucid than the bigger ones.

3. The top part (horizontal screen) is removable and is made with transparent PVC. In this part it is possible to draw or write on the user own.

4. The lighting focus is a GU10 LED bulb which is switched on with an interruptor. When the light is on, it passes trough the smallest translucid parts, and creates different shadows. This LED light makes possible to project what is drawn in the horizontal screen in the ceiling, avoiding the heating.

5. It is possible to add more removable screen parts with different colors, to draw inside of them.

final design

BOARD
lighting

Board is a lamp that is focused on the possibility of personalize it as the owner pleasures. The particularity of this lamp is that it is possible to write or draw things in the superior part of the lamp, that is also removable. It is possible to change this part and custmize it depending on the user wishes.

It is made with two different kind of PVC plastic. One of them is coloured and the other one is almost transparent. The all parts which are made with this material, are manufactured by injection molding.

It is a perfect lamp for children, and also the colors are focused in the little ones. It is possible to draw childish stories and characters in order to stimulate children to sleep alone.

It can be used by aldults aswell, offering the possibility of writing motivating phrases.

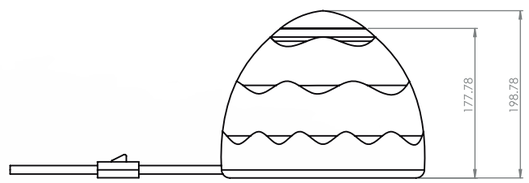

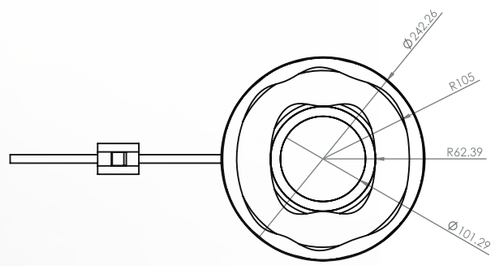

COMFORT

FURN3003

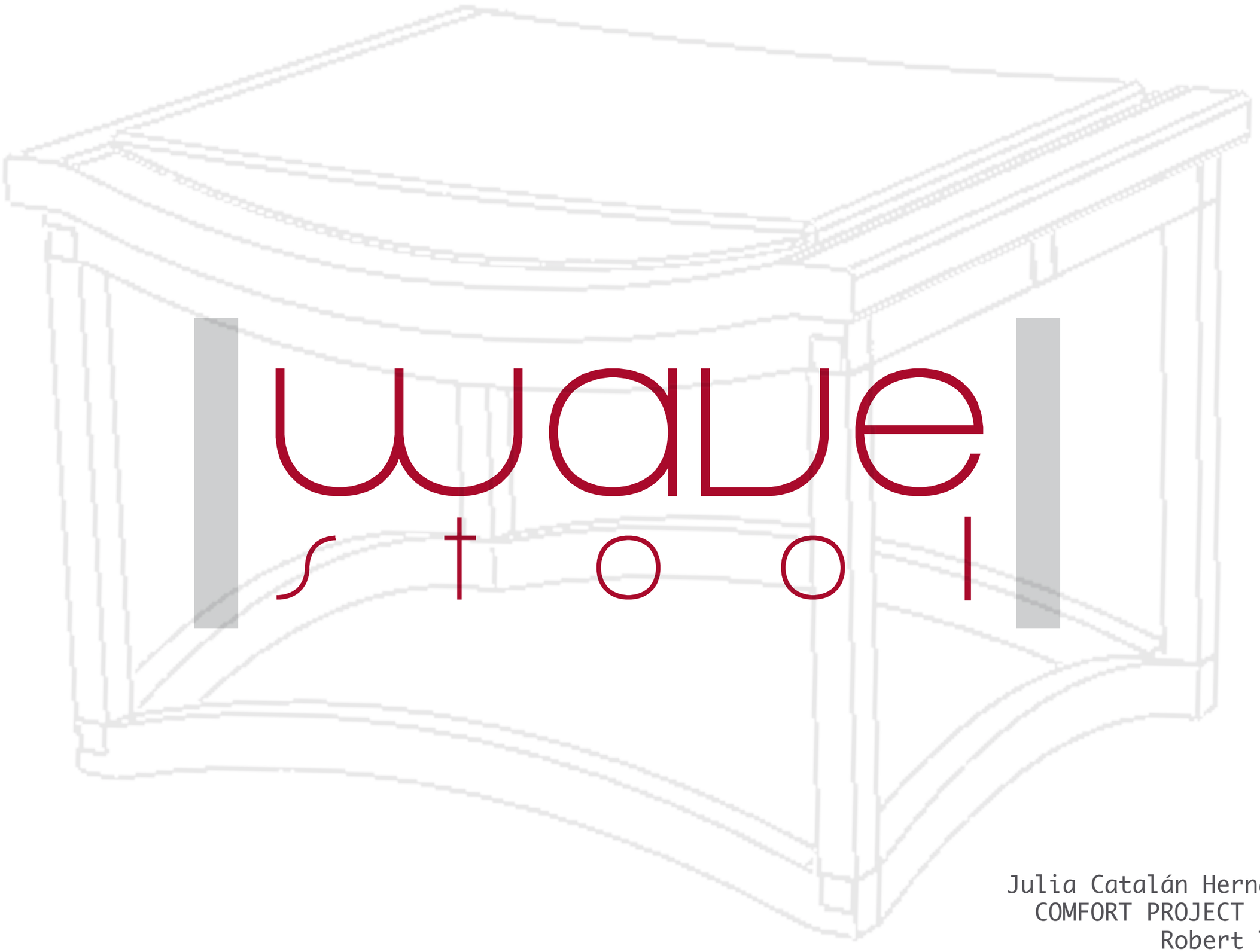

wave stool

Julia Catalán Hernández
COMFORT PROJECT - DIT
Robert Tully

conceptual design

CONCEPTS

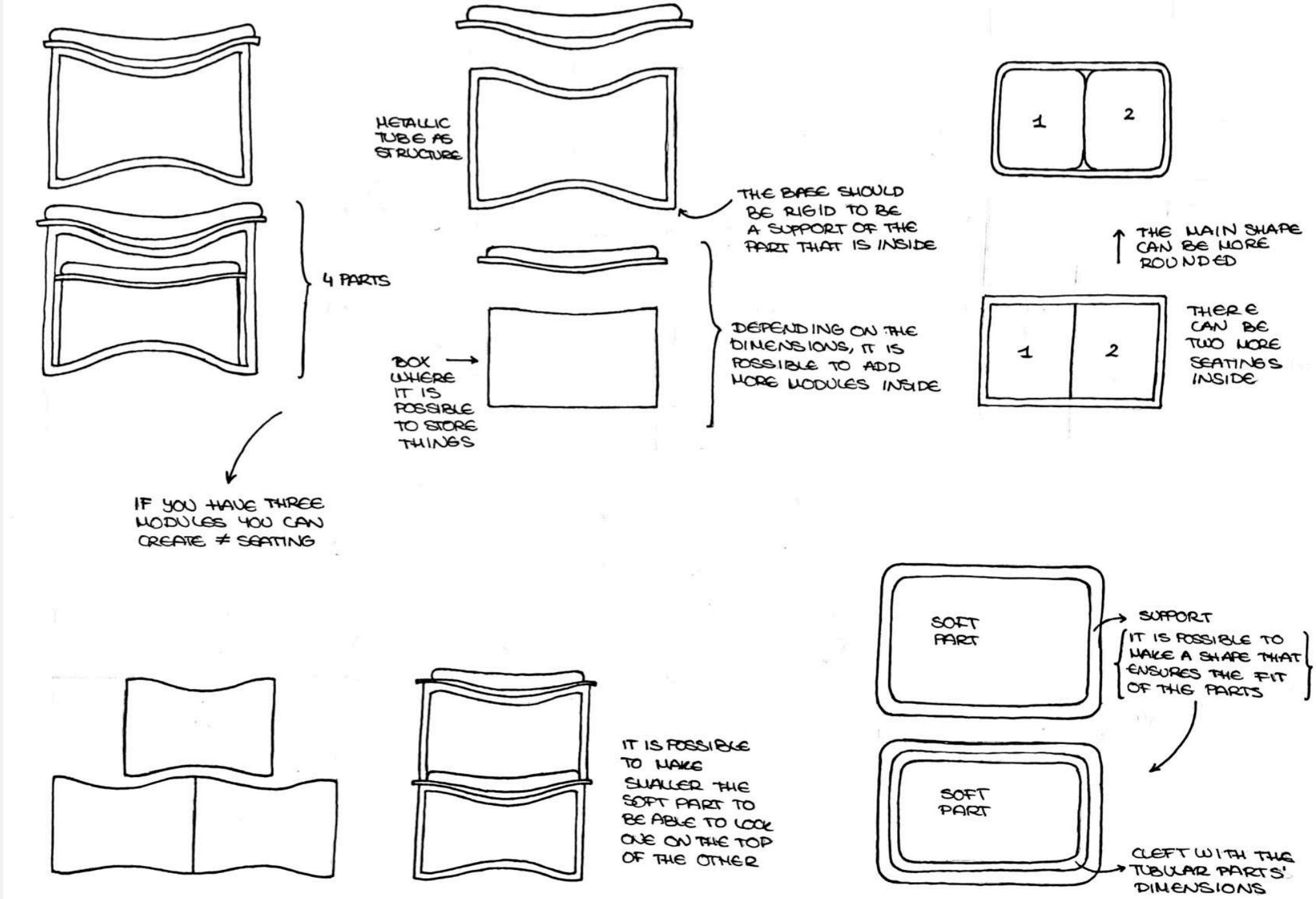
METALLIC TUBE AS STRUCTURE
THE BASE SHOULD BE RIGID TO BE A SUPPORT OF THE PART THAT IS INSIDE
1
2
THE MAIN SHAPE CAN BE MORE ROUNDED
4 PARTS
BOX WHERE IT IS POSSIBLE TO STORE THINGS
DEPENDING ON THE DIMENSIONS, IT IS POSSIBLE TO ADD MORE MODULES INSIDE
1
2
THERE CAN BE TWO MORE SEATINGS INSIDE
IF YOU HAVE THREE MODULES YOU CAN CREATE ≠ SEATING
IT IS POSSIBLE TO MAKE SMALLER THE SOFT PART TO BE ABLE TO LOCK ONE ON THE TOP OF THE OTHER
SOFT PART
SUPPORT
IT IS POSSIBLE TO MAKE A SHAPE THAT ENSURES THE FIT OF THE PARTS
SOFT PART
CLEFT WITH THE TUBULAR PARTS' DIMENSIONS

plans and annotations

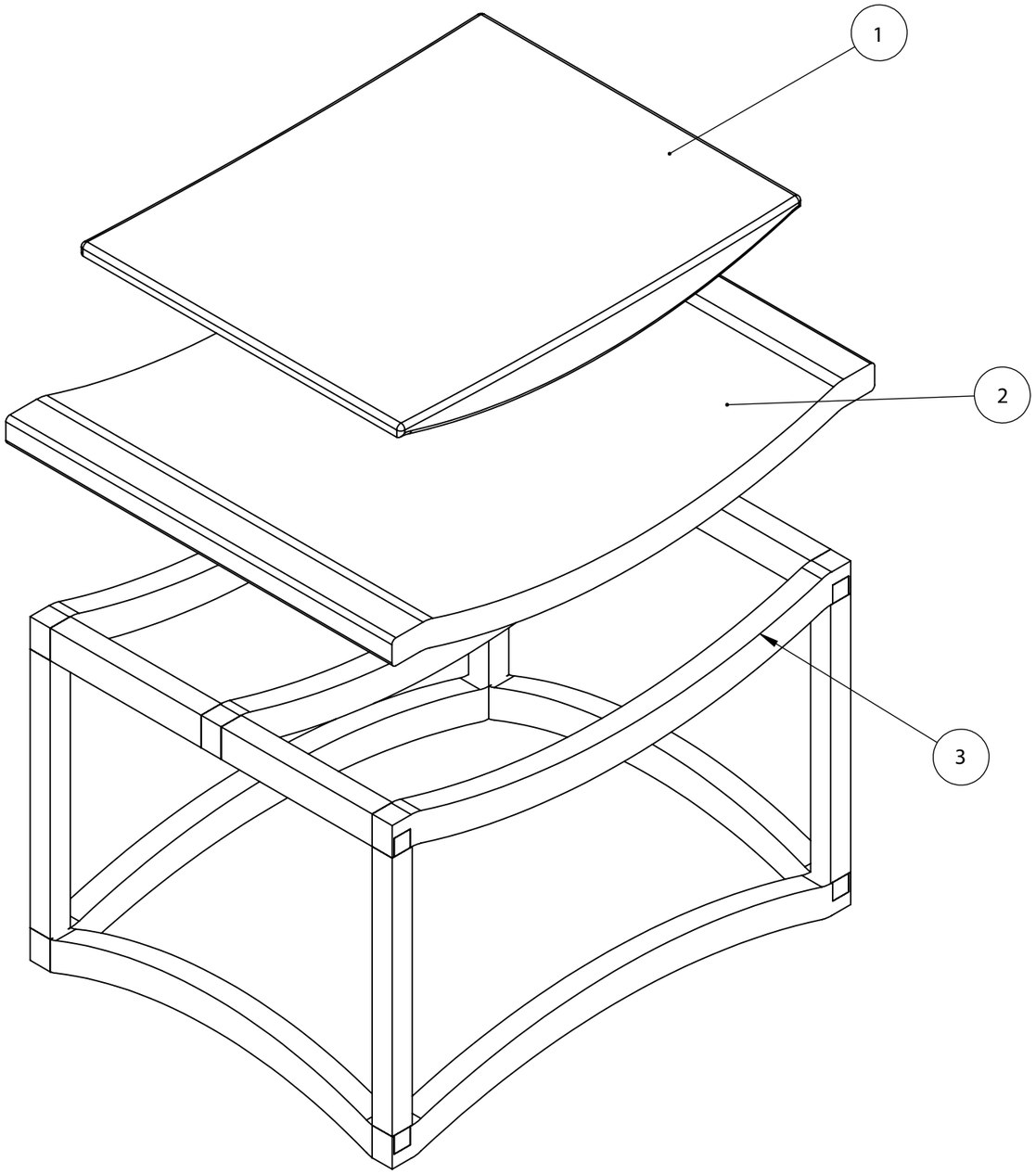

3	Structural set	1	Beech
2	Support set	1	Beech
1	Soft part	1	Foam
Number	Name	Quantity	Material

Julia Catalán Hernández	Comfort - Robert Tully
GLOBAL PLAN	Sheet 1/10

Comfort plans

A3

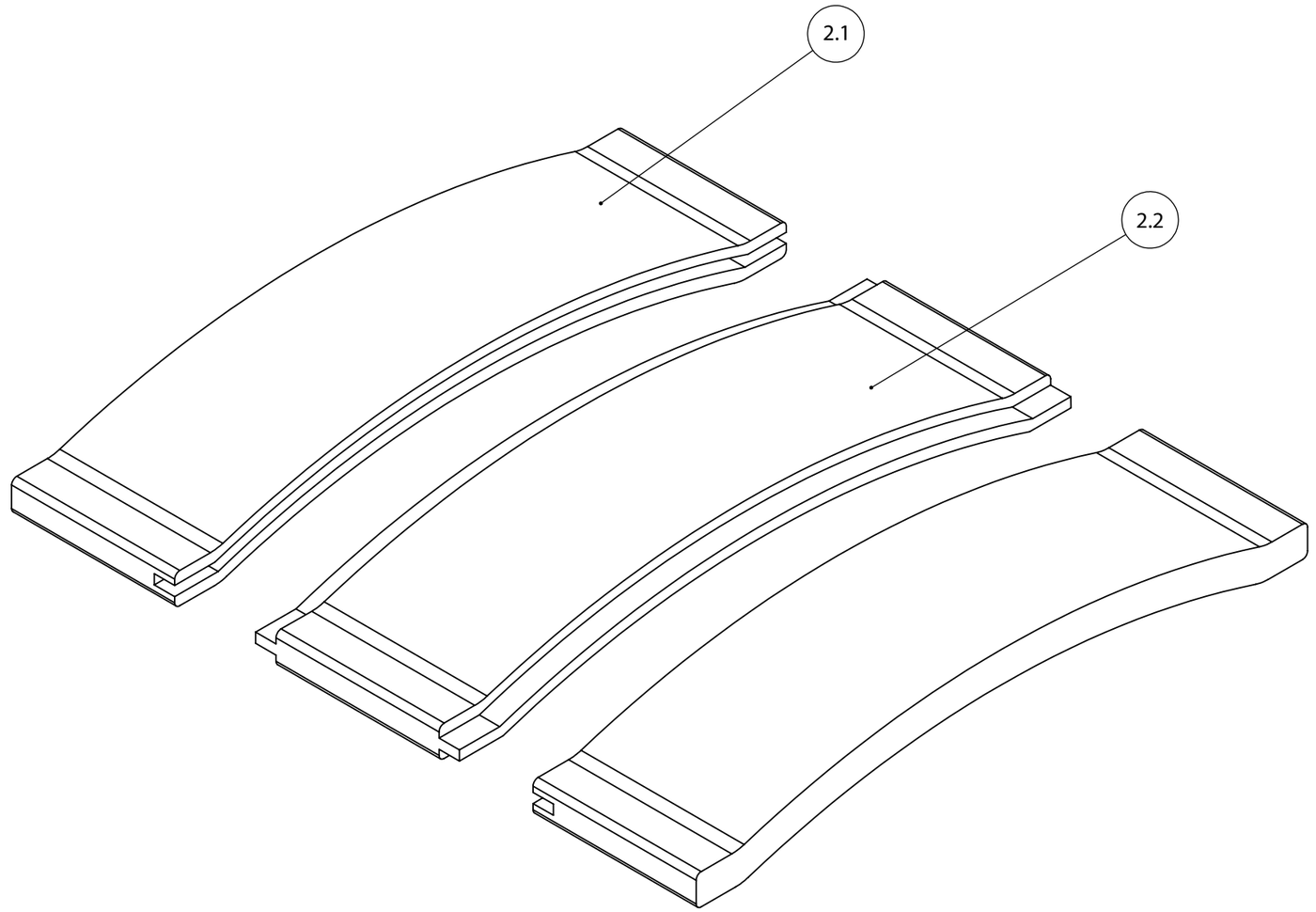

OBSERVATIONS: It is necessary to make a slot in the inferior and superior faces to be able to put one module above the other, as it is shown in the Conceptual Drawings. All individual parts are glued to the other ones.

Number	Name	Quantity	Material
2.2	Internal	1	Beech
2.1	External	2	Beech

Julia Catalán Hernández	Comfort - Robert Tully
Support set	Sheet 2/10
Comfort plans	A3

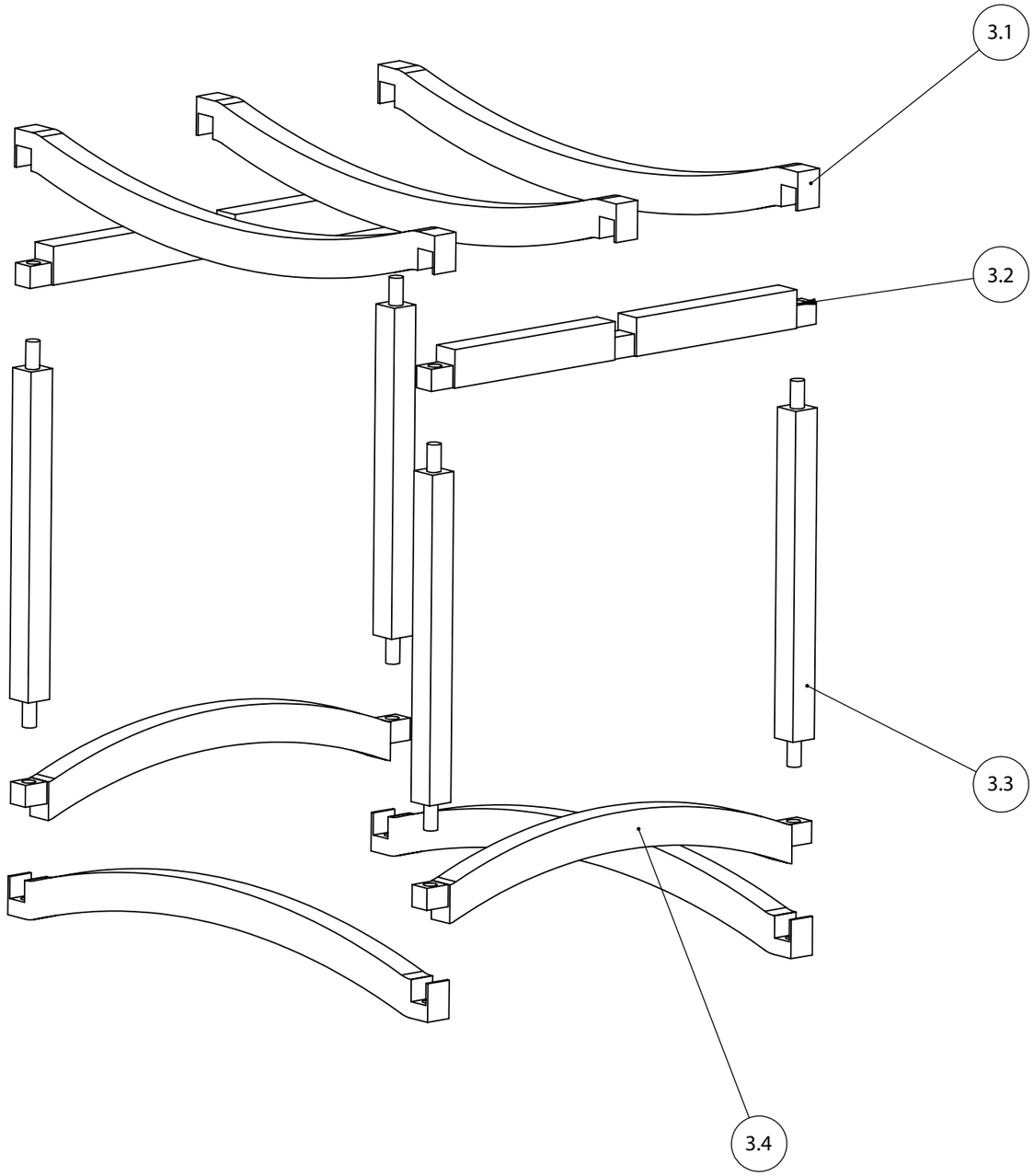

OBSERVATIONS: All individual parts are glued with the other ones adding an adhesive in the joints.			
3.4	Lateral inferior part	2	Beech
3.3	Vertical part	4	Beech
3.2	Lateral superior part	2	Beech
3.1	Frontal parts	5	Beech
Number	Name	Quantity	Material
Julia Catalán Hernández		Comfort - Robert Tully	
Structural set		Sheet 3/10	
	Comfort plans		
		A3	

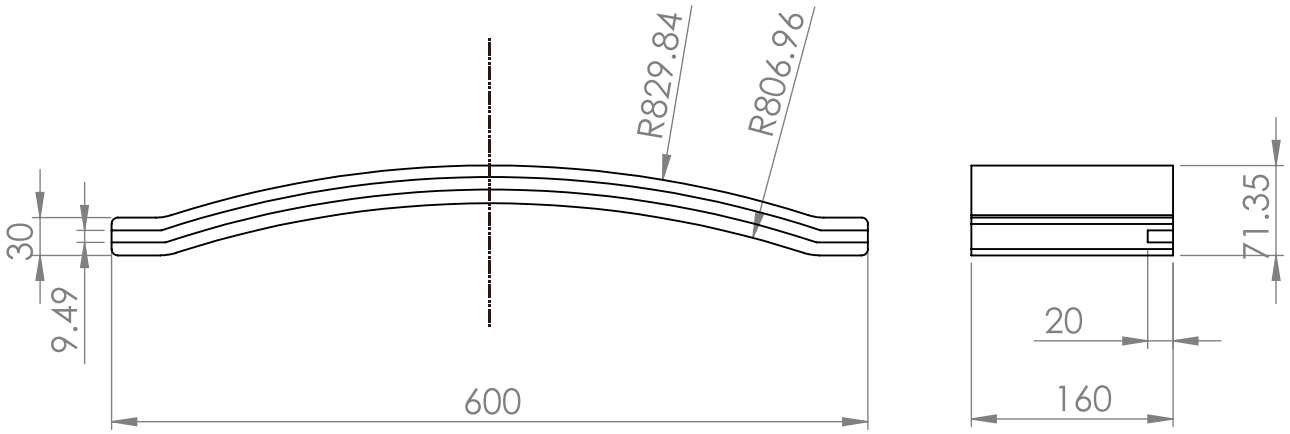

Julia Catalán Hernández	Comfort - Robert Tully
External	Sheet 4/10
Scale 1:6	Component Number: 2.1
mm	Quantity: 2

Comfort plans

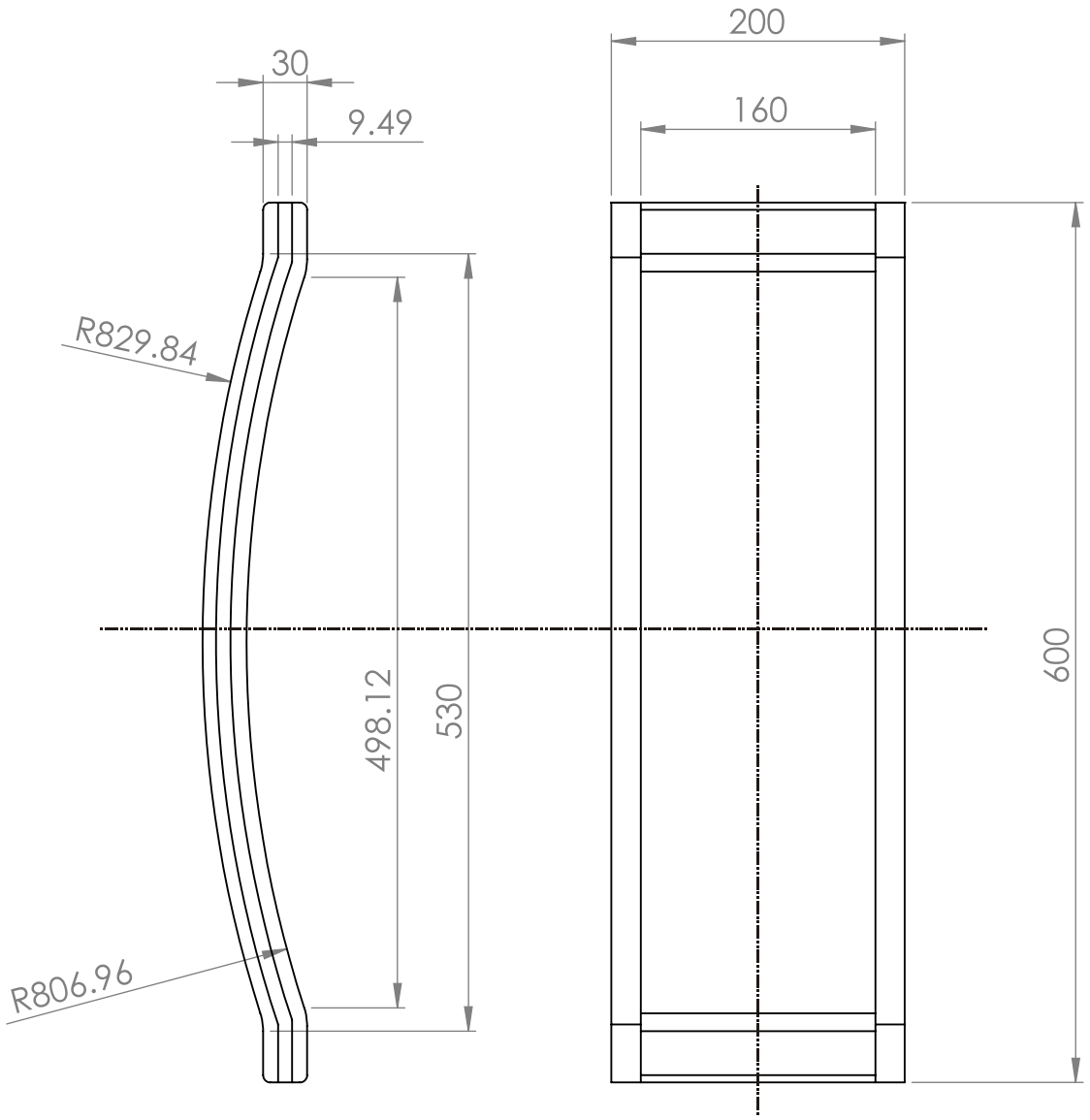

Julia Catalán Hernández	Comfort - Robert Tully
Internal	Sheet 5/10
Scale 1:5	Component Number: 2.2
mm	Quantity: 1

Comfort plans

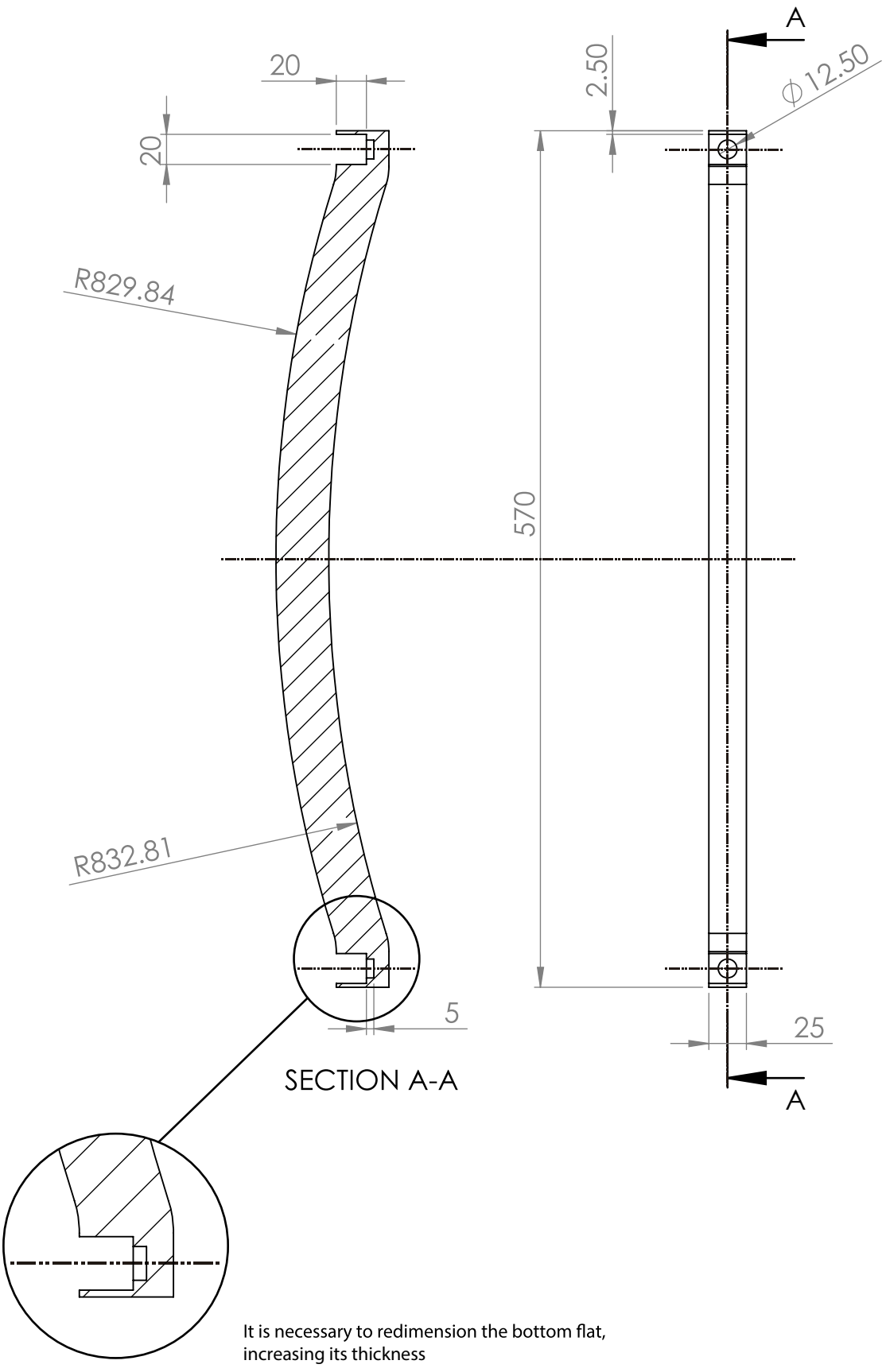

It is necessary to redimension the bottom flat, increasing its thickness

Julia Catalán Hernández	Comfort - Robert Tully
Frontal parts	Sheet 6/10
Scale 1:4	Component Number: 3.1
mm	Quantity: 5

Comfort plans

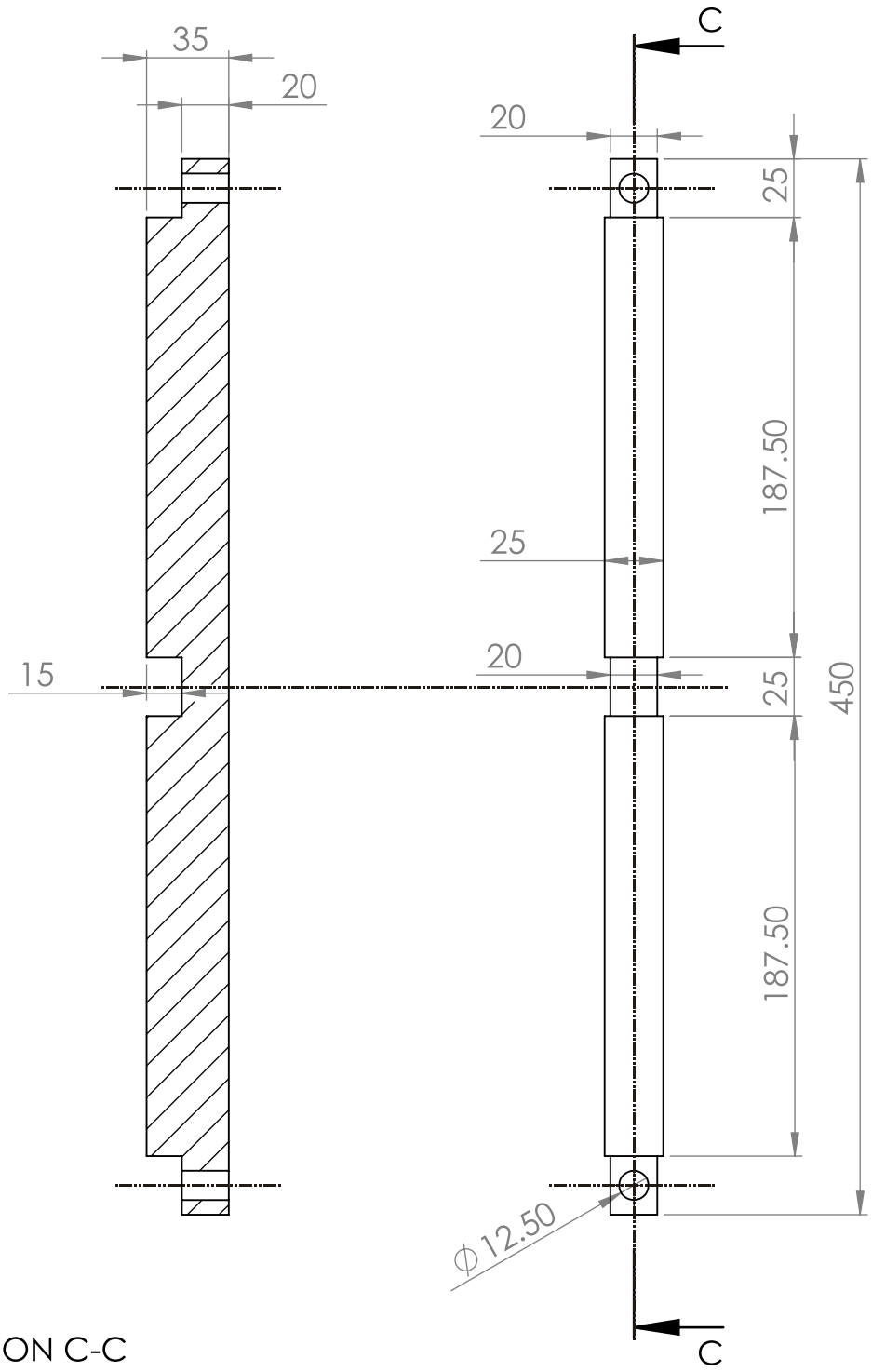

SECTION C-C

Julia Catalán Hernández	Comfort - Robert Tully
Lateral superior parts	Sheet 7/10
Scale 1:3	Comfort plans
mm	Component Number: 3.2
	Quantity: 2

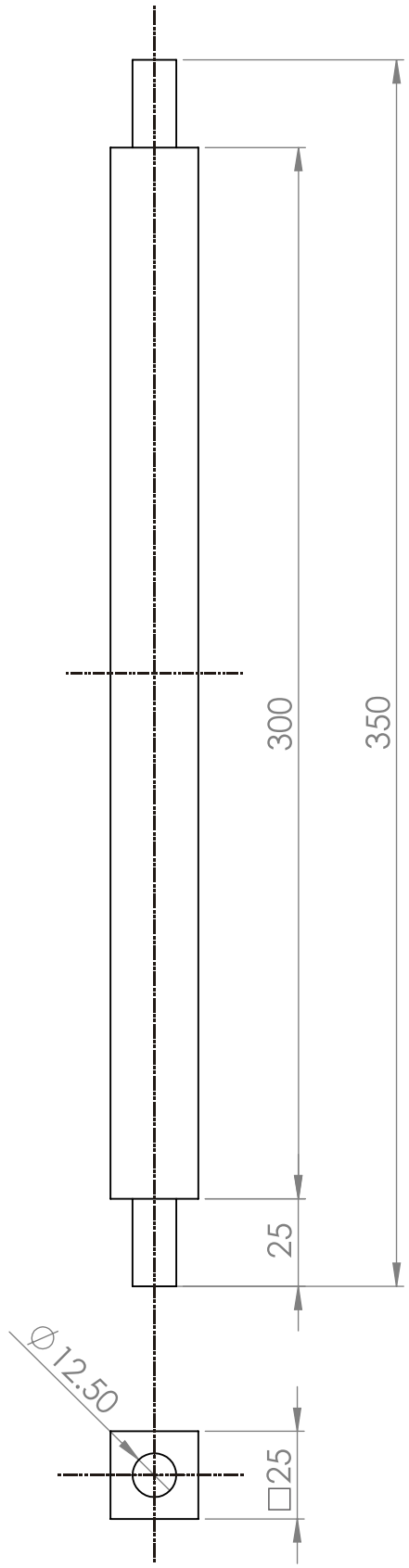

Julia Catalán Hernández	Comfort - Robert Tully
Vertical part	Sheet 8/10
Scale 1:2	Component Number: 3.3
mm	Quantity: 4

Comfort plans

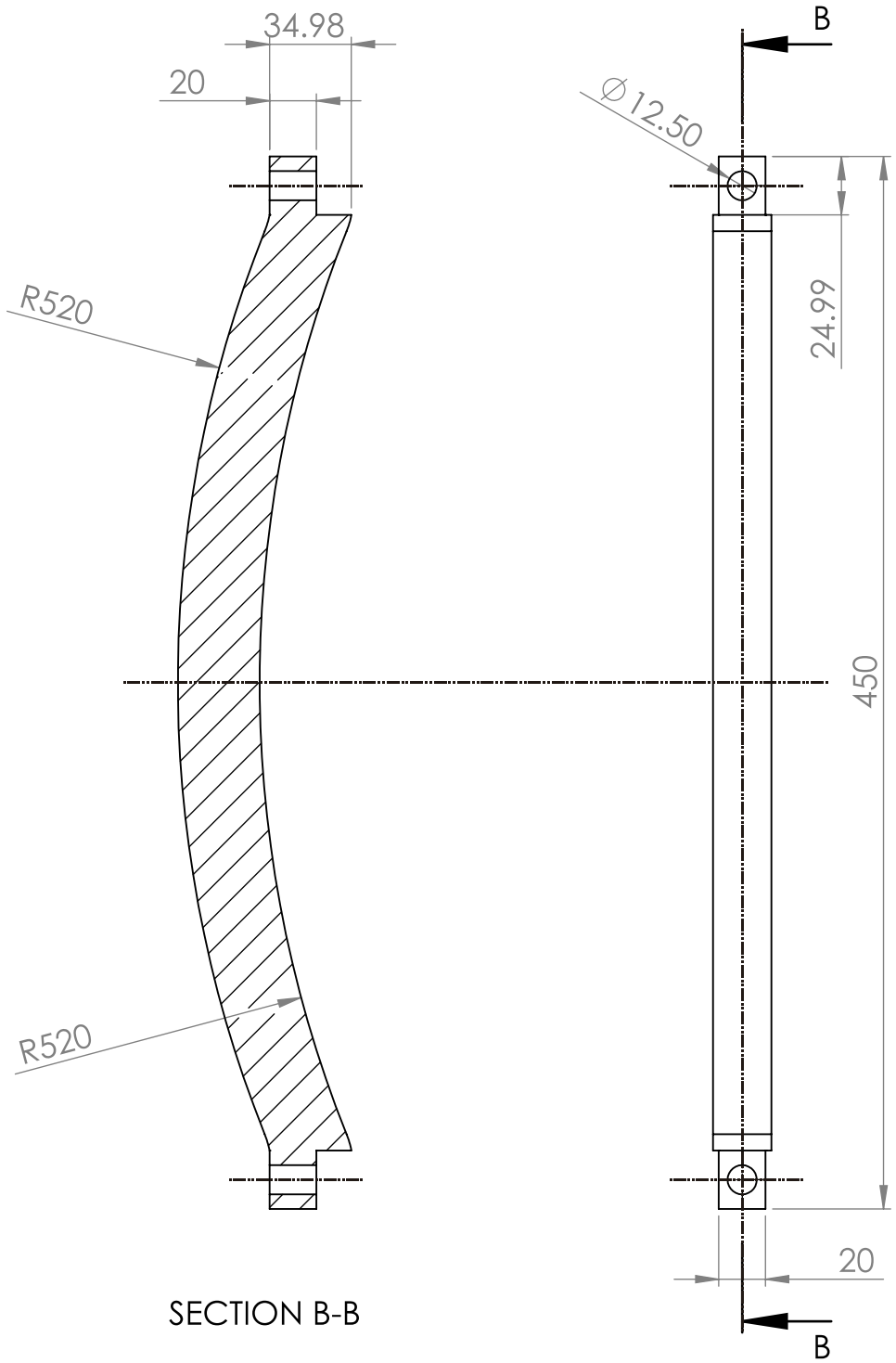

Julia Catalán Hernández	Comfort - Robert Tully
Lateral inferior parts	Sheet 9/10
Scale 1:3	Component Number: 3.4
mm	Quantity: 2

Comfort plans

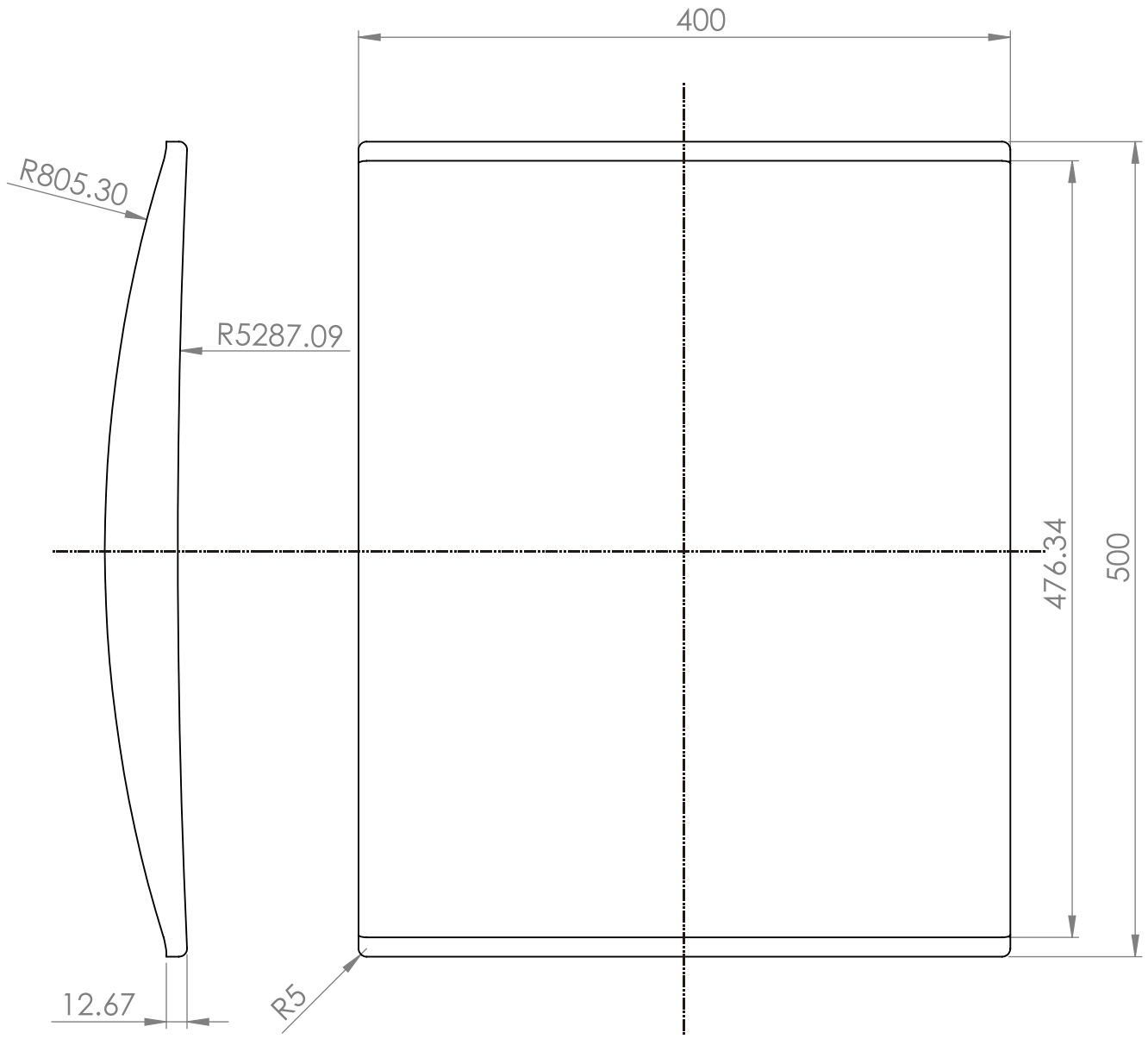

Julia Catalán Hernández	Comfort - Robert Tully
Soft part	Sheet 10/10
Scale 1:5	Component Number: 1
mm	Quantity: 1

Comfort plans

ANNOTATIONS:

1. The foam used is the Viscoelastic one. This kind of foam offers a soft seating which can be adapted to different bodies, weights, ages, positions... Another advantage of this kind of foam is that it can be cutted in different sizes.

2. The foam is recovered with fabrics. In this case it has been chosen the cotton fabric due to the flexibility of use of this material. What is more, tit is a huge variety of colours that this colour can accept.

3. In the support set it is necessary to glue the different parts and build the big one. Ones it is dry and fixed, it can be mechanized in a CNC machine to make the slots in the superior and inferior faces.

4. The soft part can be locked or removed from the Support Set. It is a pillow that can be used in different ways depending on the user or the situation.

5. All beech parts that are in the structural set, have to be glued ones with the others to be more efficient and secure for the user.

final design

wave stool

Wave Stool is a seat that allows for eventual rest and a great exibility of use.

The base serving as the rest area of the body can be removed or fitted into the structural part. This allows the use of the stool in different positions.

The base and the structural part, like all other pieces, is made of solid beech wood, with a curved process. Perches are used which are mounted on top of each other. The assemblies are simple and with them you get a structural part that supports the weight and the necessary efforts. In addition they have to be reinforced with an adhesive to acquire more security.

The upper part of the seat is a piece of viscoelastic foam, covered with garnet cottom fabric, which provides greater comfort at rest.

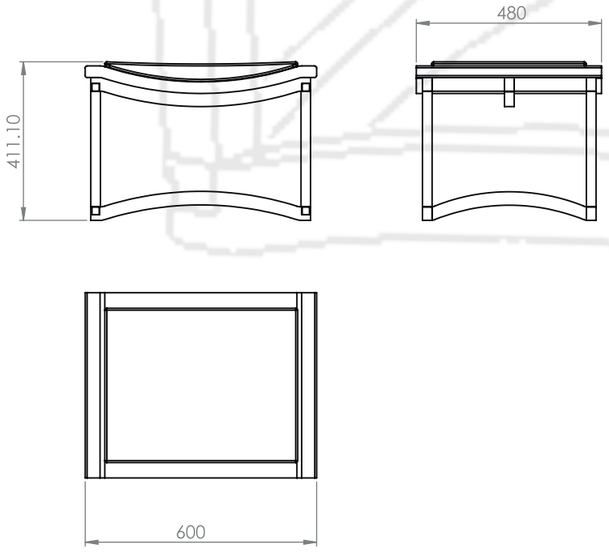

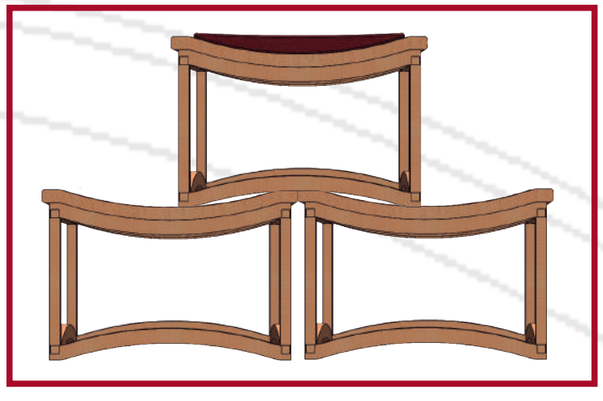

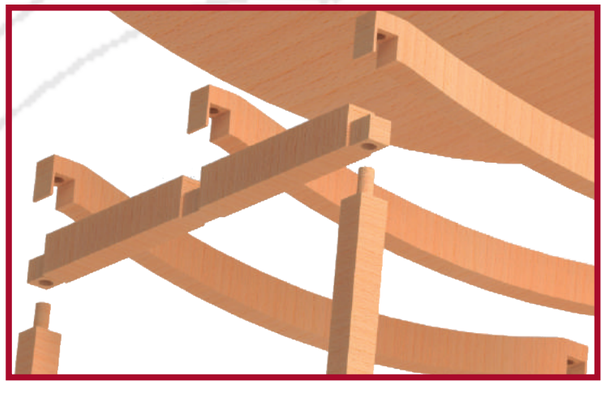

FLEXIBLE LIVING

FURN2001

MOLTO
compact furniture

Julia Catalán Hernández
FLEXIBLE LIVING - DIT
Robert Tully

conceptual design

CONCEPTS

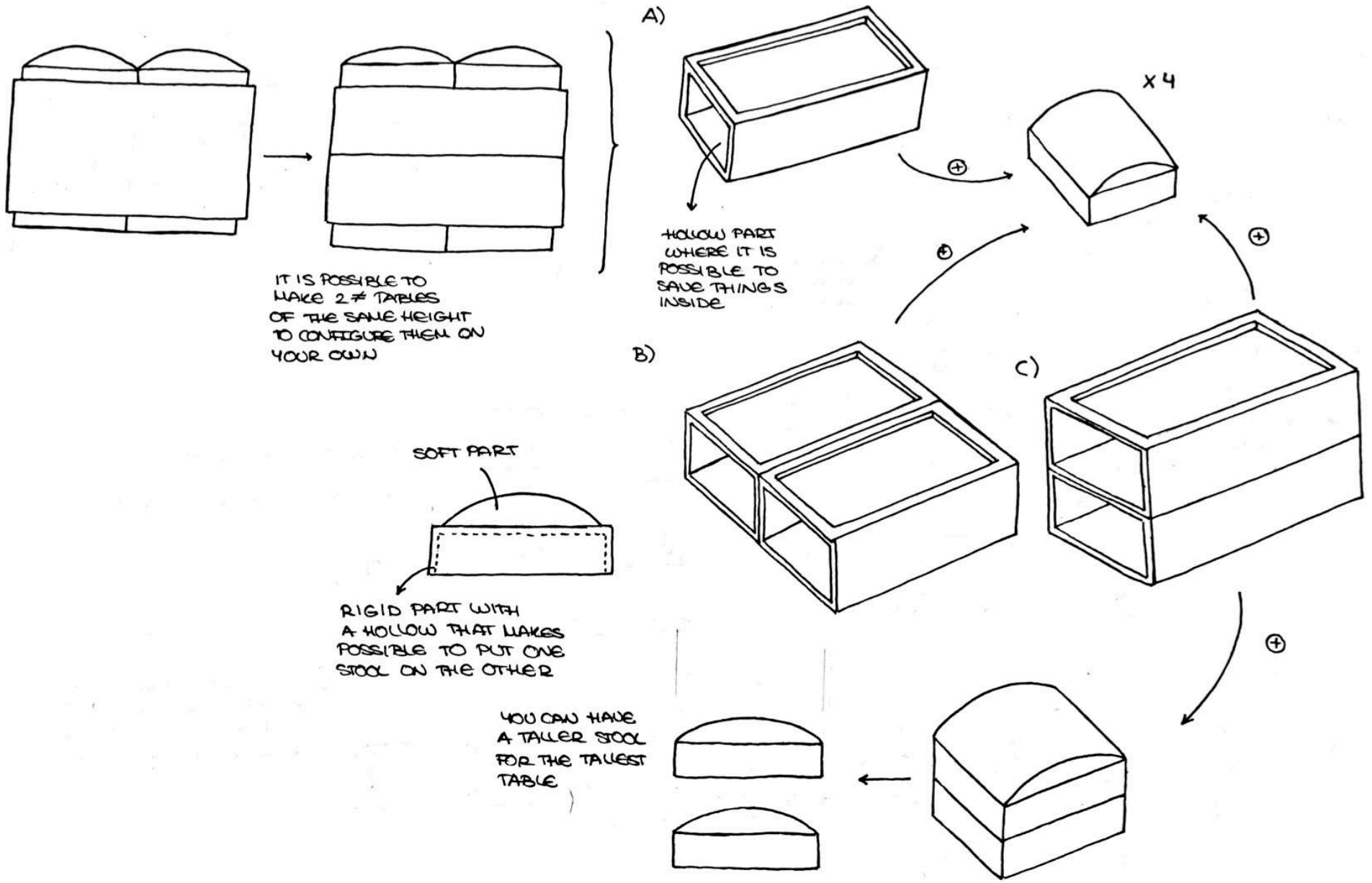
A)
x4
HOLLOW PART WHERE IT IS POSSIBLE TO SAVE THINGS INSIDE
IT IS POSSIBLE TO MAKE 2 # TABLES OF THE SAME HEIGHT TO CONFIGURE THEM ON YOUR OWN
B)
C)
SOFT PART
RIGID PART WITH A HOLLOW THAT MAKES POSSIBLE TO PUT ONE STOOL ON THE OTHER
YOU CAN HAVE A TALLER STOOL FOR THE TALLEST TABLE

Plans and annotations

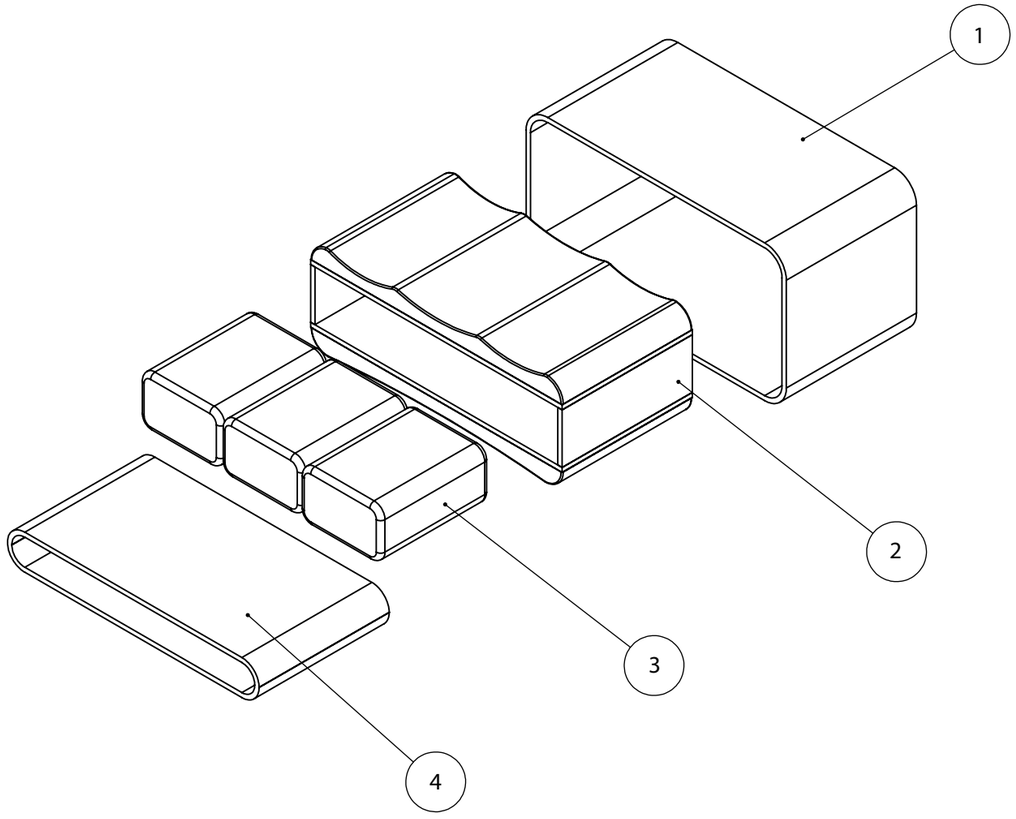

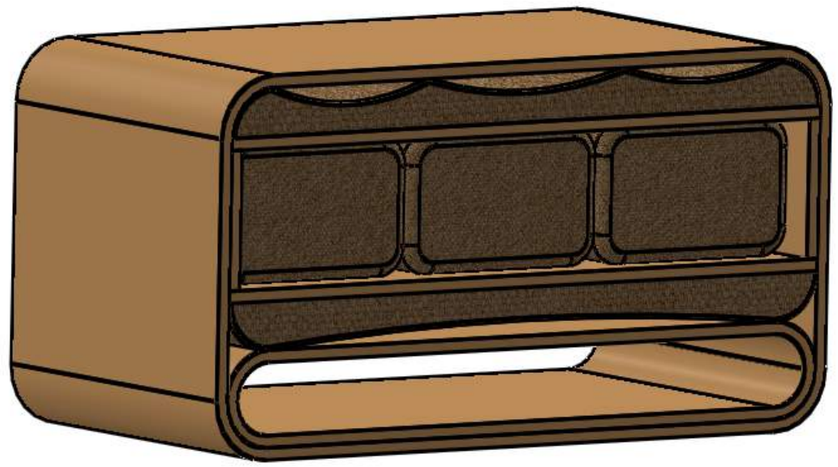

4	Inferior drawer	1	Birch plywood
3	Soft parts	3	Foam and fabrics
2	Middle part set	1	Birch, foam and fabrics
1	External part	1	Birch plywood
Number	Name	Quantity	Material
Julia Catalán Hernández		Flexibe living - Robert Tully	
GLOBAL PLAN		Sheet 1/9	
	Flexible living plans		
		A3	

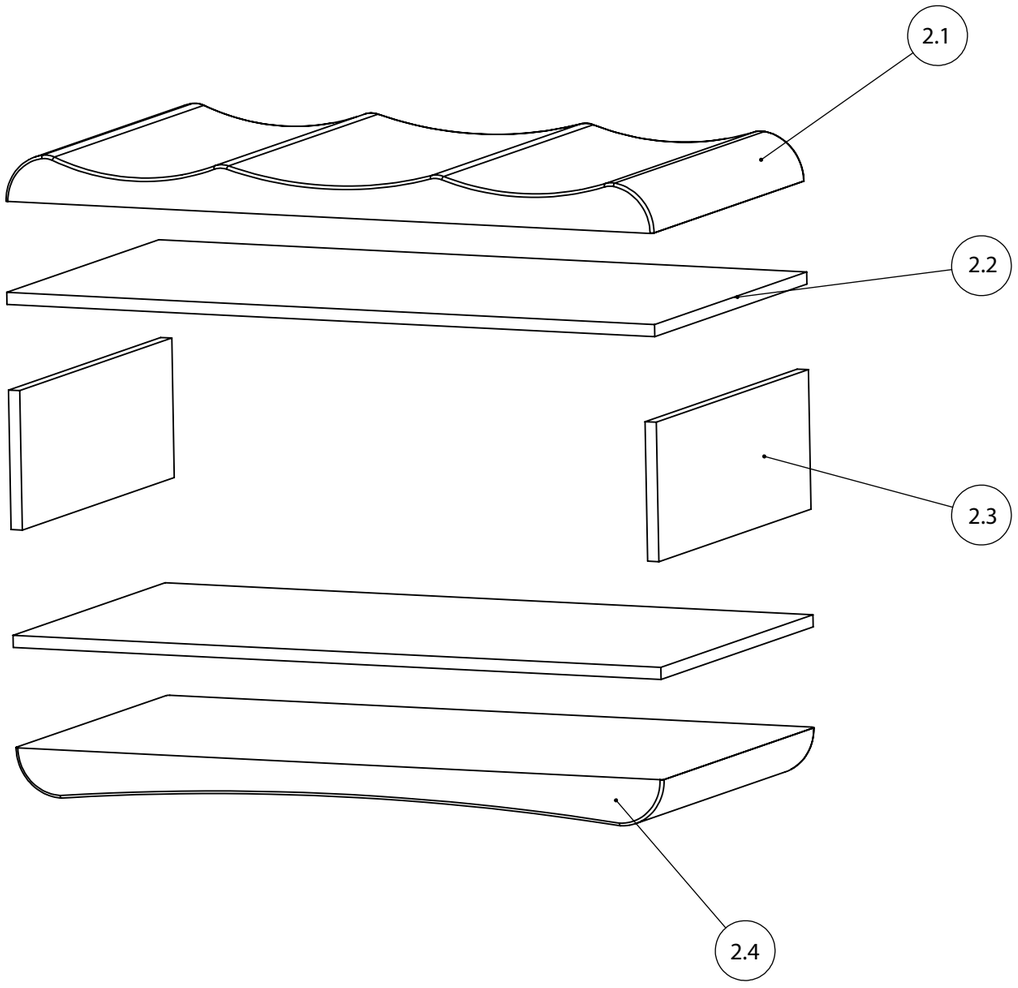

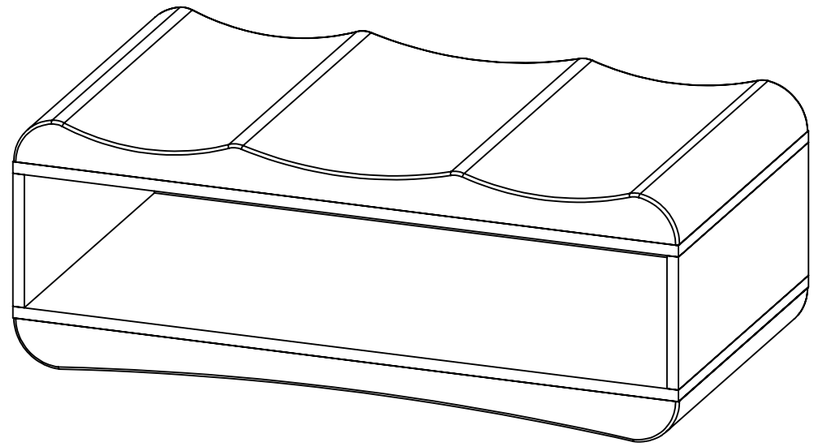

OBSERVATIONS: Depending on the material's behaviuor, it would be necessary to add other Small Board in the middle of the Big board glued, to be more resistent.

Number	Name	Quantity	Material
2.4	Soft inferior part	1	Foam and fabrics
2.3	Small board	2	Birch plywood
2.2	Big board	2	Birch plywood
2.1	Soft superior part	1	Foam and fabrics

Julia Catalán Hernández	Flexible living - Robert Tully
Middle part set	Sheet 2/9
Flexible living plans	A3

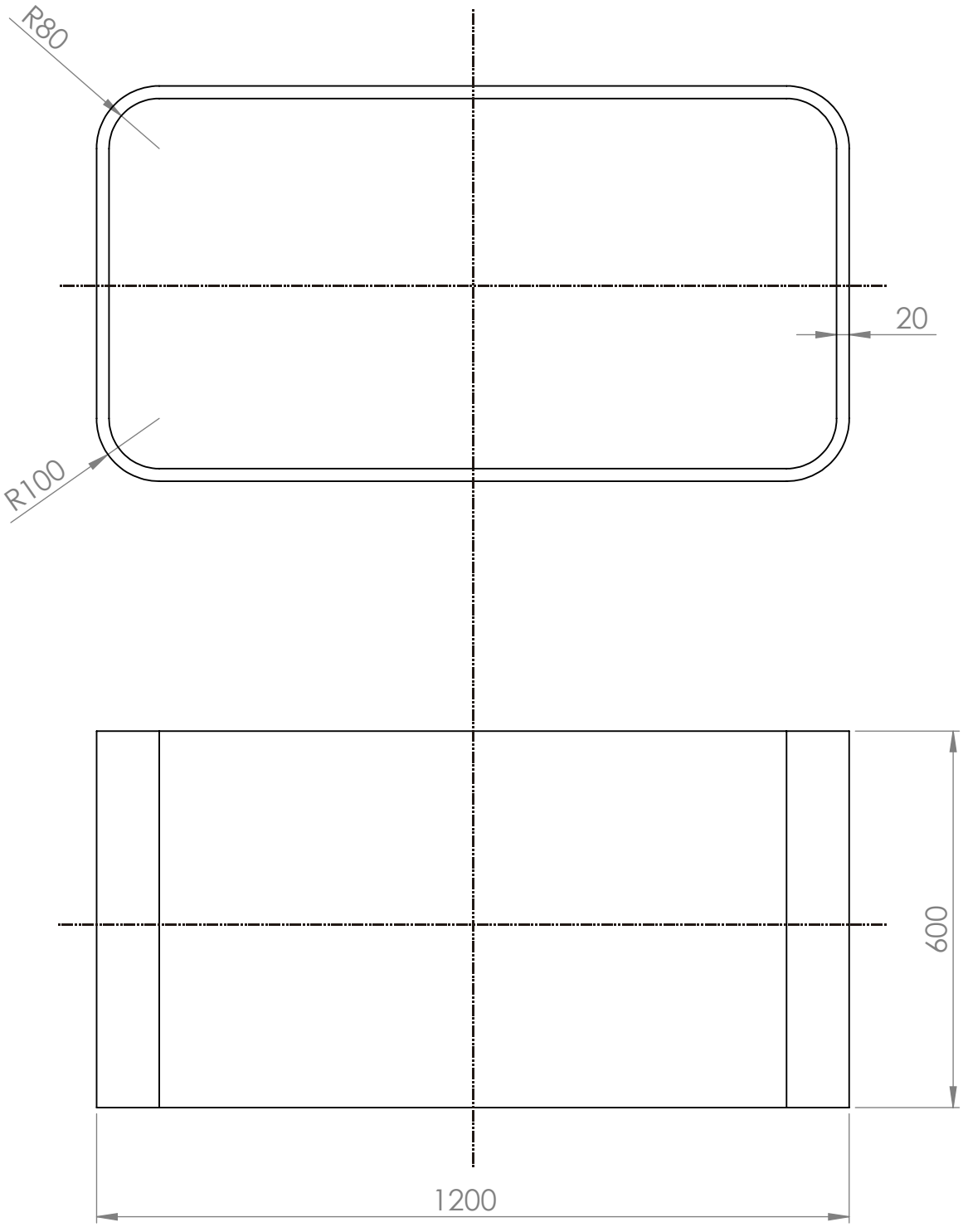

Julia Catalán Hernández	Flexible living - Robert Tully
External part	Sheet 3/9
SCALE 1:10	Component number: 1
mm	Quantity : 1

Flexible living plans

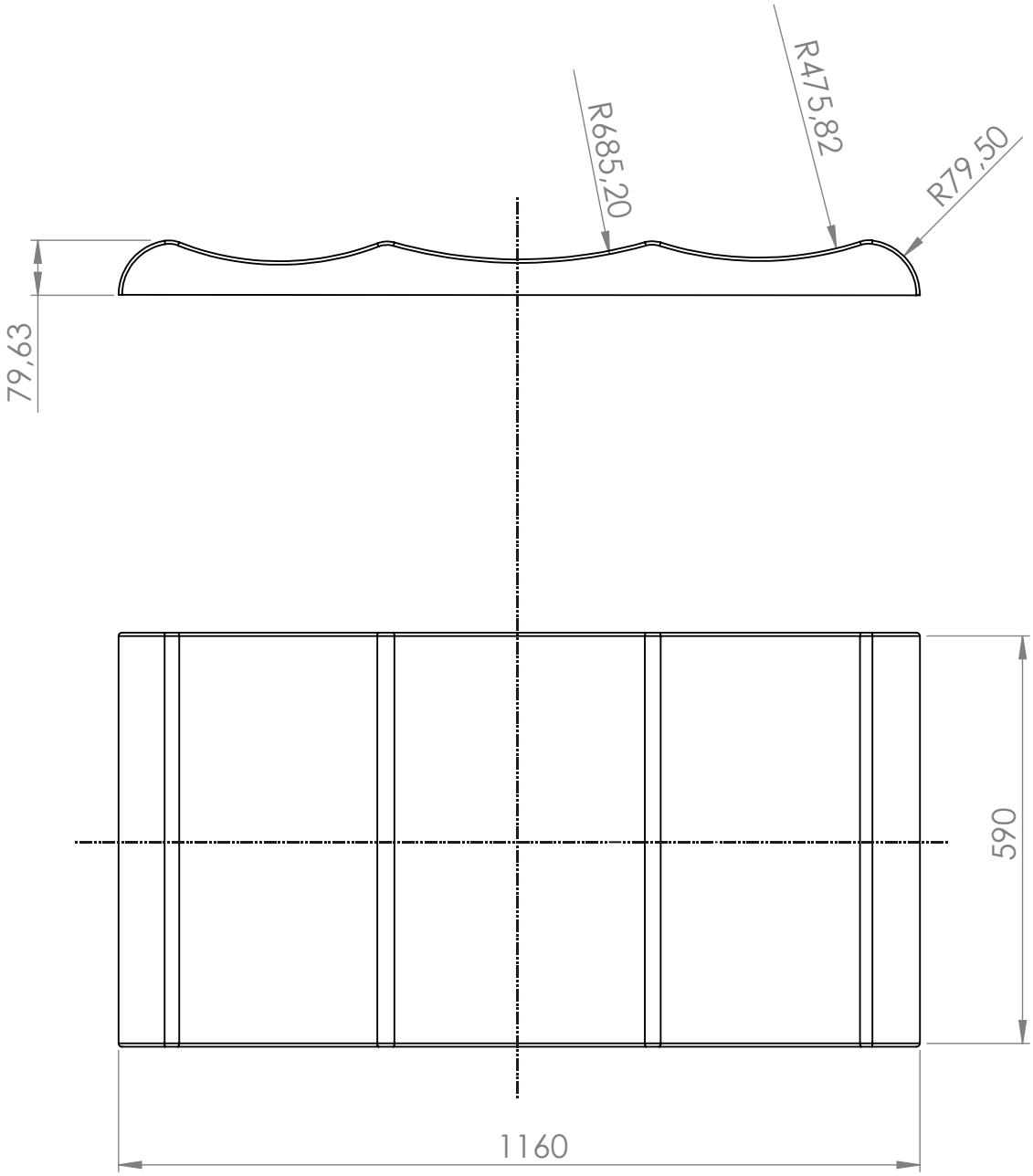

Julia Catalán Hernández	Flexible living - Robert Tully
Superior soft part	Sheet 4/9
SCALE 1:10	Component number: 2.1
mm	Quantity : 1

Flexible living plans

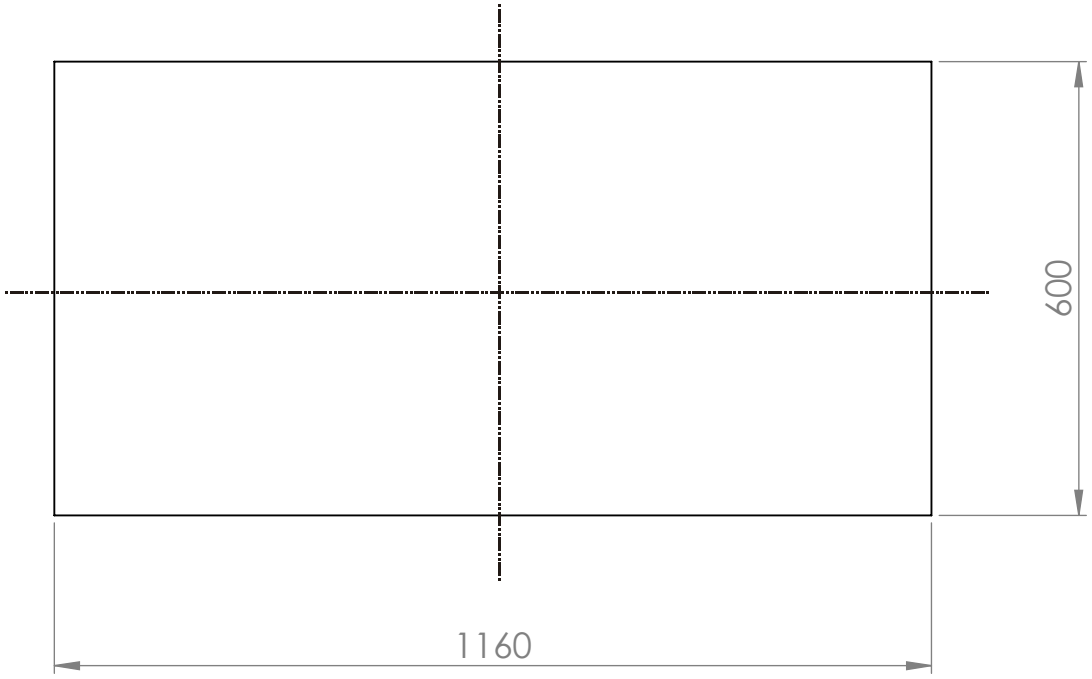

Thickness - 20mm

Julia Catalán Hernández	Flexible living - Robert Tully
Big board	Sheet 5/9
SCALE 1:10	Component number: 2.2
mm	Quantity : 2

Flexible living plans

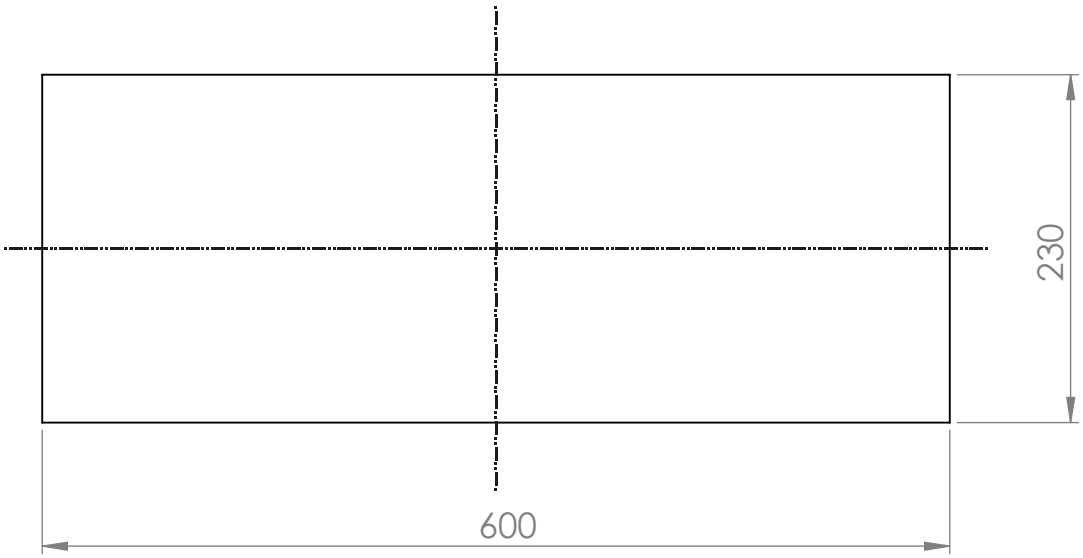

Thickness - 20mm

Julia Catalán Hernández	Flexible living - Robert Tully
Small board	Sheet 6/9

SCALE 1:10	Flexible living plans	Component number: 2.3
mm		Quantity : 2

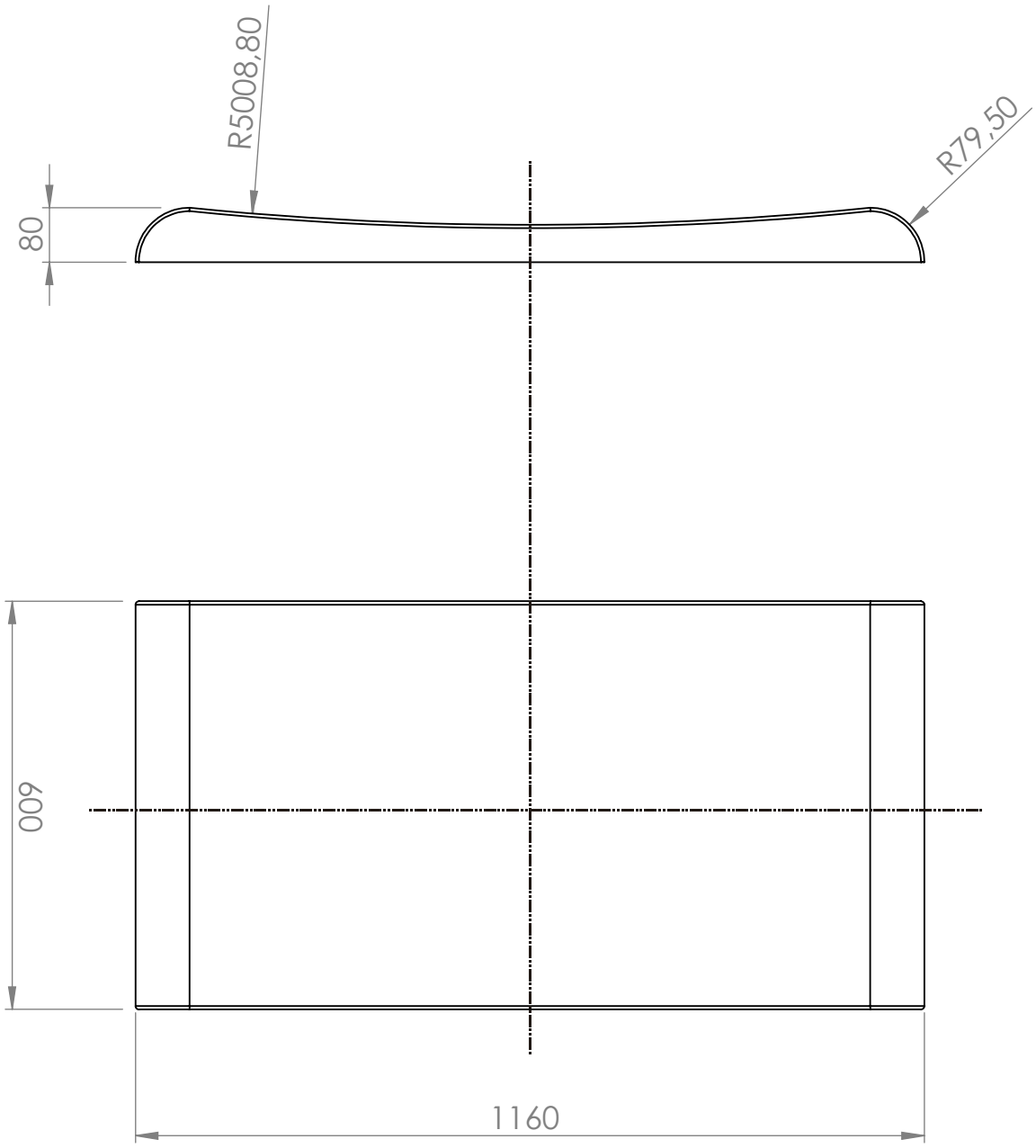

Julia Catalán Hernández	Flexible living - Robert Tully
Soft inferior part	Sheet 7/9
SCALE 1:10	Flexible living plans
mm	Component number: 2.4
	Quantity : 1

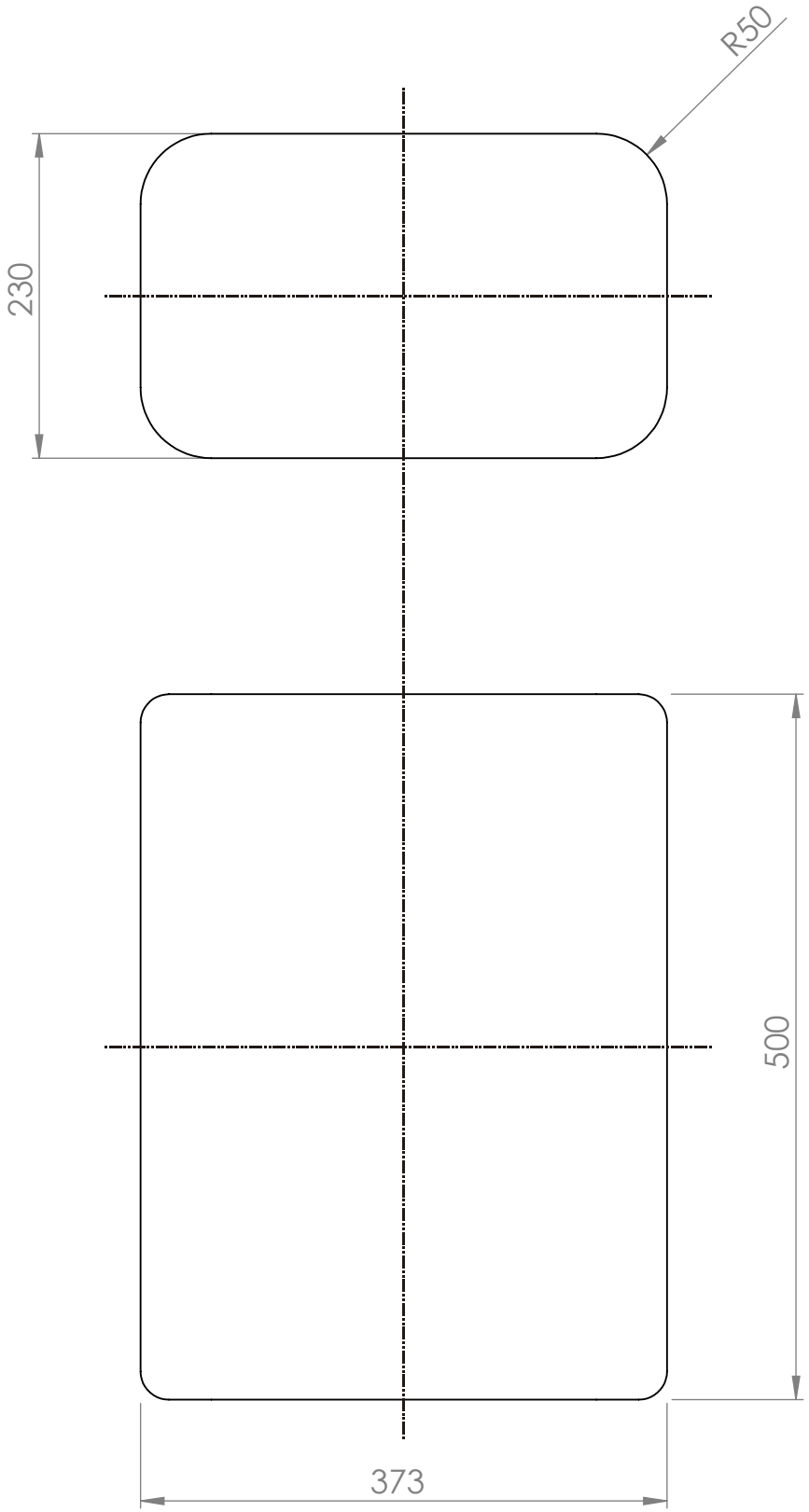

Julia Catalán Hernández	Flexible living - Robert Tully
Soft parts	Sheet 8/9
SCALE 1:10	Component number: 3
mm	Quantity : 3

Flexible living plans

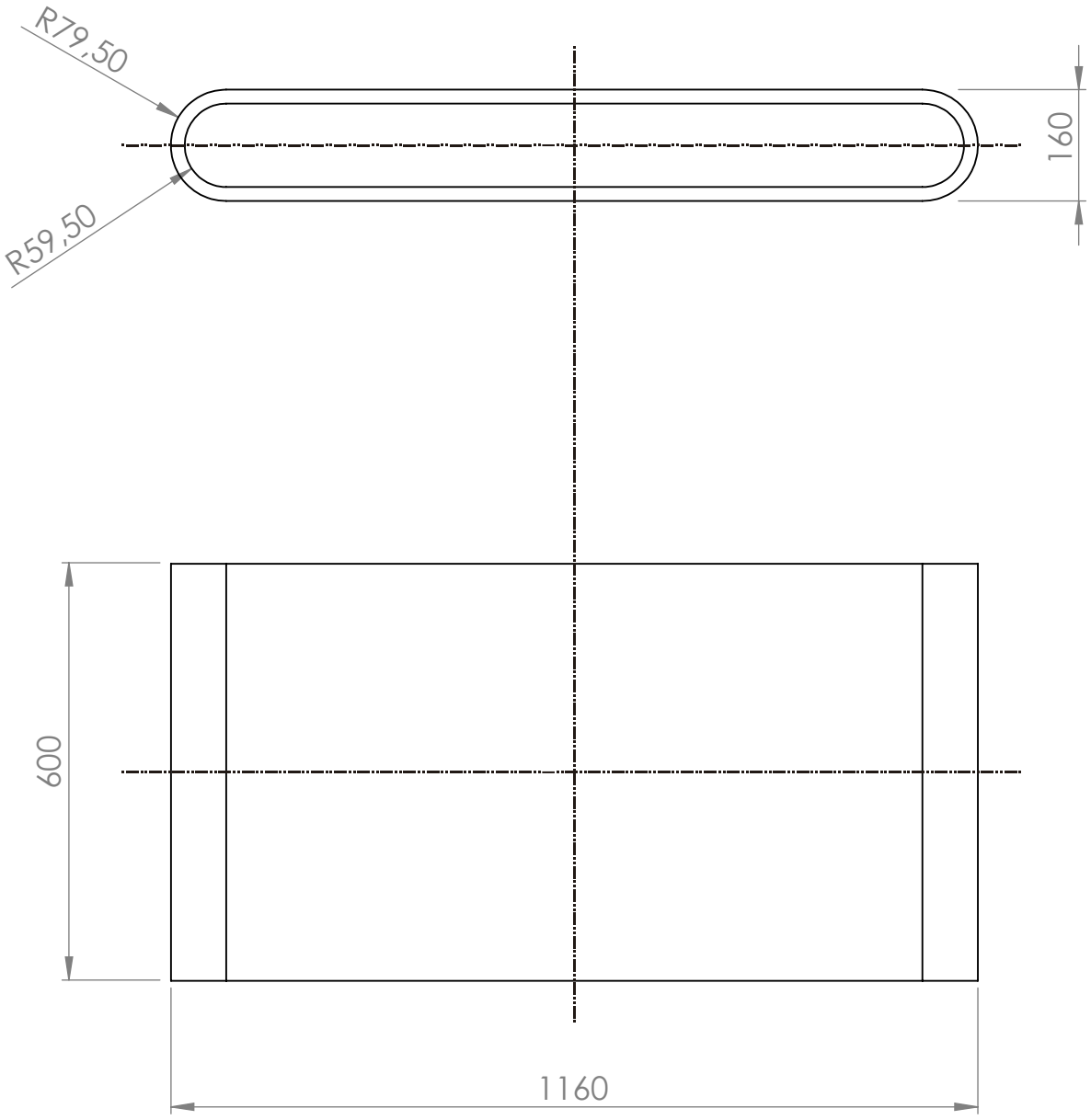

Julia Catalán Hernández	Flexible living - Robert Tully
Inferior drawer	Sheet 9/9
SCALE 1:10	Flexible living plans
mm	
Component number: 4	
Quantity : 1	

ANNOTATIONS:

1. It is necessary to add a reinforce in the middle of the seating part, to make it more efficient and ressitent.

2. All birch parts are laminated, curved and glued in the extreme.

3. There are a lot of different uses for the furniture:
    - It can be used as one table, a bench and a drawer.

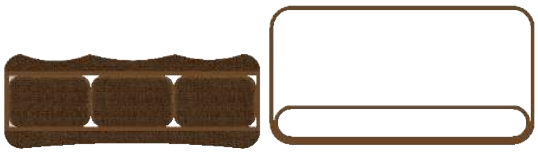

- It can be used as a table and two bench.

- It can be used as a sofa, a table and a bench.

- There are other possibilities, as can be individual puffs, footrests...

4. All soft parts are made with expanded polystyrene beads, covered with burlap fabric (imitating puffs).

5. The general aspect is rustic.

final design

MOLTO
compact furniture

Molto is a compact and multifunctional furniture, that allows to carry out diverse activities and provides different ways of use according to the needs of the user.

It consists of five main parts. The external part has the support function and once recognizes the other components. The drawer of the bottom also serves as a bench if combined with individual puffs. The central component can be used as a bench, single bed (if turned around) and as a storage element for individual puffs.

All parts and components of wood are of birch laminated wood subjected to a bending process. The elements that represent the rest of the body, and therefore softer, son of foam and covered with burlap.

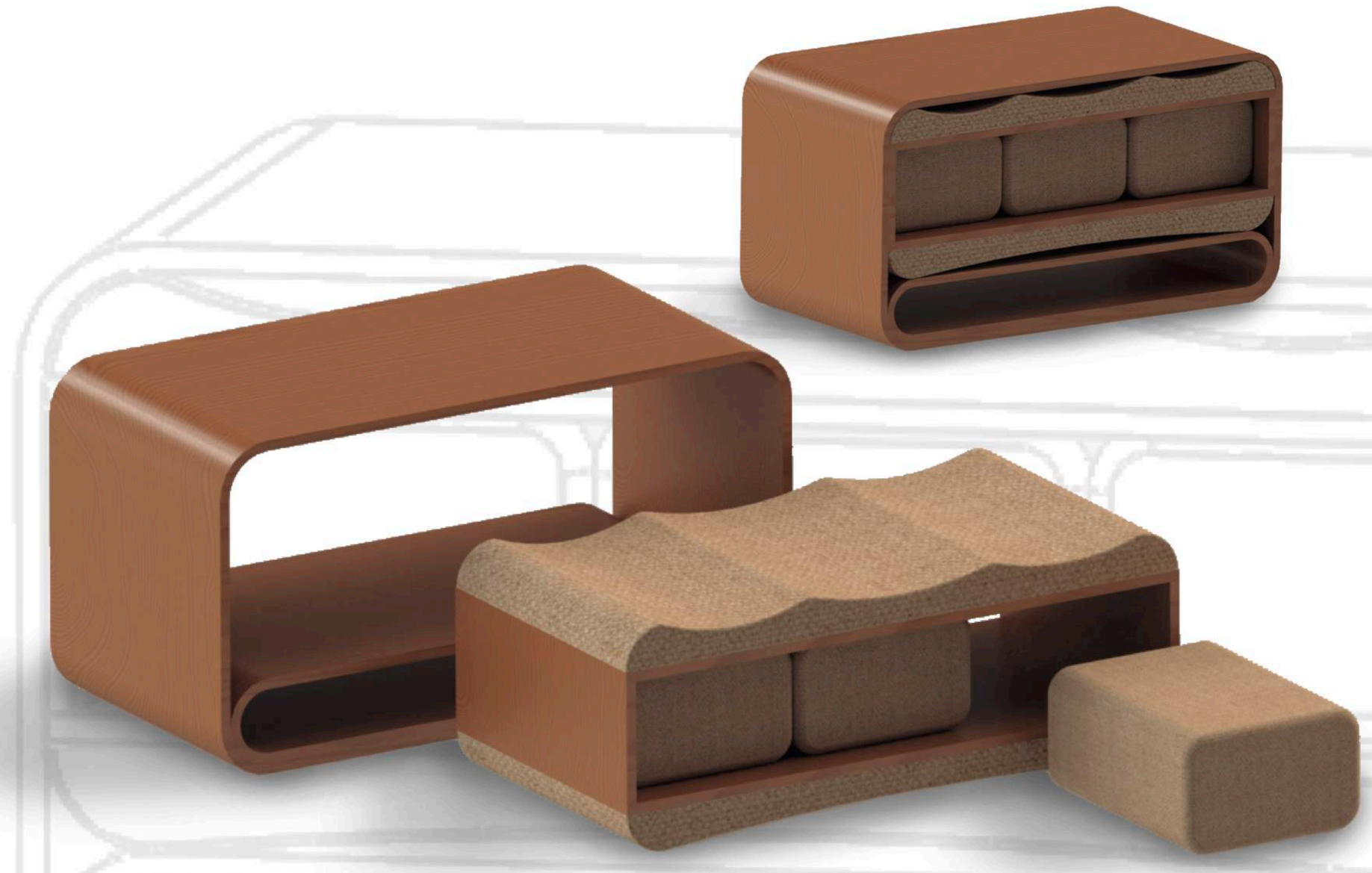

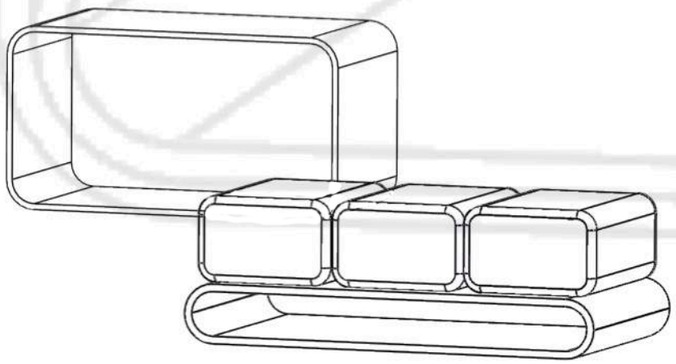

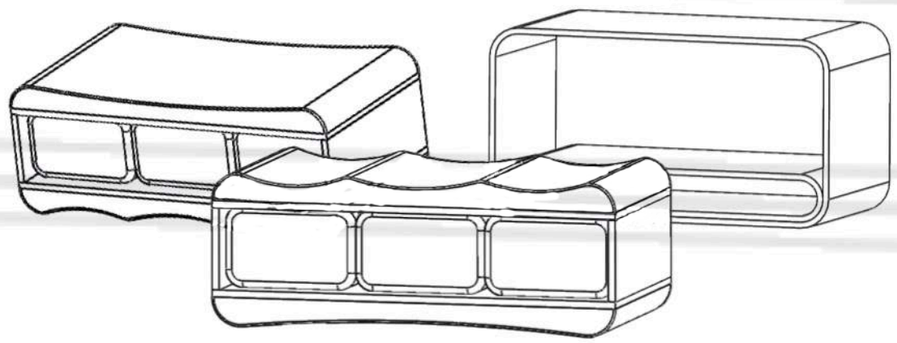

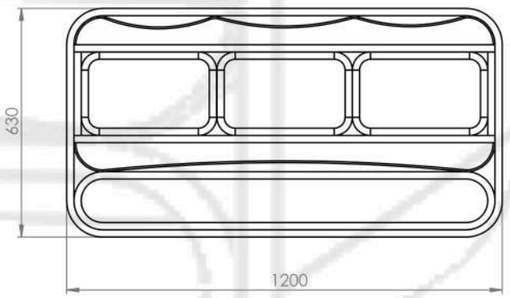

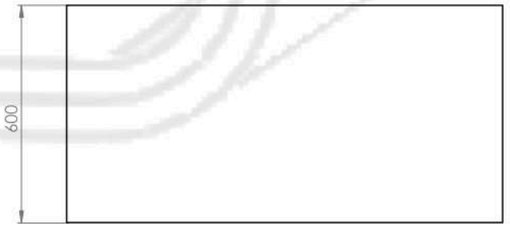

PRODUCT VISUALISATION

PDVS3411

Assessment 1

The Brazen Head

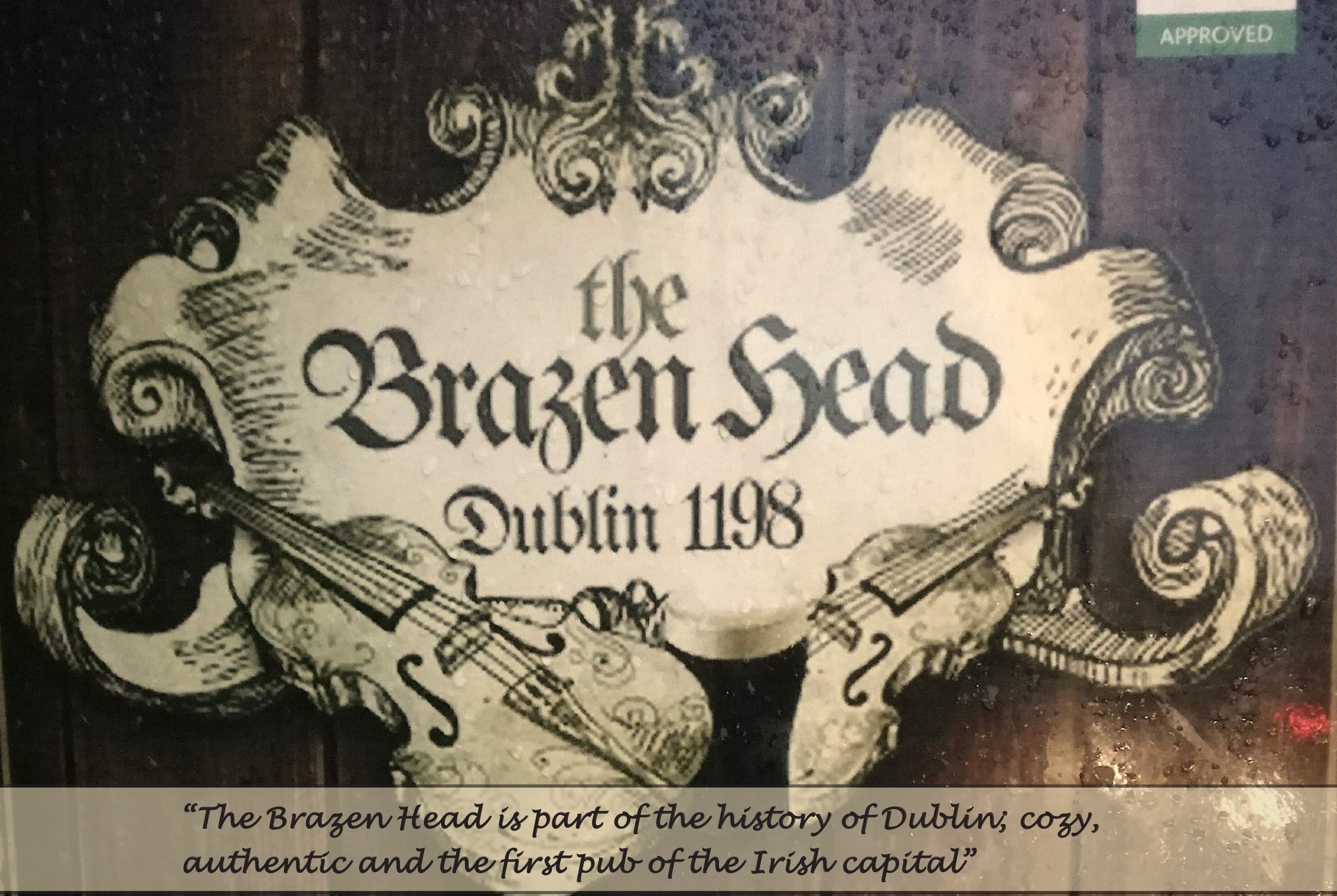

"The Brazen Head is part of the history of Dublin; cozy, authentic and the first pub of the Irish capital"

History

The Brazen Head is the oldest known pub in Dublin. The beginning of this bar dates back to 1198. Initially, this pub was a carriage house, installed in 1198. Nowadays it is not clear how much of the original structure is intact, but the general sense of the old pub remains.
The pub has managed to retain the characteristics of its past and the essence of its patrons, who have included some important characters as James Joyce, Brendan Behan, Jonathan Swift, Daniel O' Connell…
Today it can be recognized some famous figures, including famous musicians like Van Morrison, Hothouse Flowers....
During the Siege of Limerick, a cannon ball was fired by the Williamite army and removed the head of a known red-haired girl of ill-repute. This happened while she was watching the battle against Sarsfield and his men in this building. When the new tavern was built on the site of the building in 1794 it was called 'The Sign of the Brazen Head'.
In later centuries, the insurrectionists of 1916 and the leaders of the War of Independence, including Michael Collins, attended there for planning the revolution. It was an important place for some authors like Flann O'Brien or Brendan Brehan.

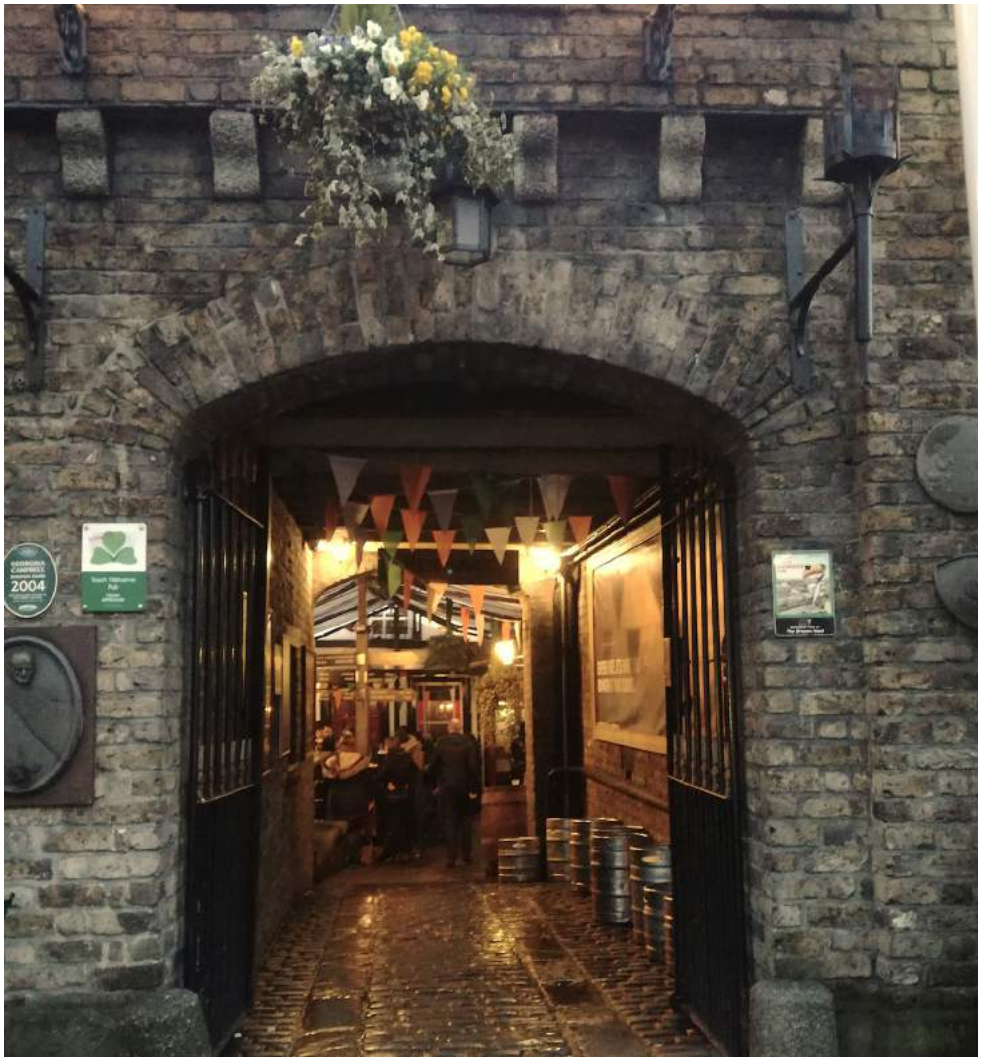

The Brazen Head is located on Bridge Street, as it was originally placed. Today it is a very popular pub. It is known by tourists and locals due to the true old atmosphere that have kept and the good food and drink. It is important to know that the location of the bar is very central, only a few minutes to Temple Bar and the Guinness Storehouse. Nowadays it is one of the most visited places in Dublin.

GUINNESS
GUINNESS
Telefon
GUINNESS
The Brazen

Tel : 6779549
the Brazen Head
Dublin 1198
Welcome to Irelands Oldest Pub
WiFi
WHISKEY
#SpiritOfDublin

GUINNESS

Accessibility to the public

The Brazen Head is one of the most important and interesting pubs of Dublin, due to its age and its food and drink. For this reason, its opening hours is very broad and it is extended from Monday to Sunday.

Monday: 10:30 - 00:30
Tuesday: 10:30–23:30
Wednesday: 10:30–23:30
Thursday: 10:30–23:30
Friday: 10:30–00:30
Saturday: 10:30–00:30
Sunday: 12:30–23:30

The Brazen Head has a good reputation for fine food served in traditional and contemporary dishes. It is very known for the traditional stews of beef and Guinness and Iris stew. Al these food is served with another ingredient in one bowl.
Food is served every day from 12 noon to 21:30.
There is a special menu available from Monday to Friday between hours of 12:00 noon and 14:00. It is not necessary a reservation for dinner or lunch, and all types of diners are welcome, from individual or couples, to tour groups and large parties.
The Brazen Head has established as one of the best pubs in Dublin where live music can be listened. Irish traditional music and well-ballades are played every day in the pub. Every night it is possible to find a variety of talented bands playing, but the most popular music event is on Sunday afternoon, from 15:30 – 18:30. A band provides music that allows customers to sing or play their own songs.

218 km
267 km
LIVERPOOL
MANCHESTER
BAR
NORTH POLE
LIFFEY
7 m
4089 km
98 m
757 km
2798 km
LONDON
AMSTERDAM
MOSCOW
REYKJAVIK
167 km
7 km
BELFAST
CROKE PARK
5121 km
7168 km
SYDNEY

Interesting architectural aspects

The Brazen Head was built initially as a carriage house in 1198. As it has been said, nowadays it is not possible to know how much parts of the original building are intact and which ones are modified. The same happens with the architect, that is not known.

After being a carriage house where travelers could leave their horses, it became a place where they could rest for a while. Good food and drink was served there and also a place to sleep. During years, some details of the bar have been changed, but the general appearance of the 11th century is intact.

Formerly, the main entrance was empty, there was only a bench and the front door. The horses where leaved in the external yard, and the interior had the same function than nowadays.

The Brazen Head today has changed its distribution. Externally, the facade is low and dark, as it was common in the 11thcentury. It has the finishes on the top like a castle. The front door and the fences follow the same style line than the external wall. There are four ancient lampposts located at the top of the facade that illuminate the entrance to the pub. It is important to mention the exterior decoration with flowers and posters of the time. In the entrance, there is a bench similar to the one that was in the inner courtyard.

Once you pass the fences of the entrance, there is the tunnel that leads to the inner courtyard. The inner courtyard is decorated with flowers and elements of the time, and also with current and old flags and photographs.

In the interior, it is possible to see the 11th century atmosphere. There are different rooms with tables and chairs, both individual and group. In one of the corners there are an old fireplace that makes the environment more familiar. In the biggest room, there is the counter of the bar, that is also decorated with the same details as the rest of the place.

One of the most characteristic interior places is the wall that is covered with tickets signed by famous people and musicians or artists who have been in this pub.

ANTICIPATION
GUINNESS
BUSHMILLS
MICHIGAN STATE POLICE
POLICE DEPARTMENT
LEBANON POLICE
POLICE
PISTOLE
SHERIFF
LOS ANGELES POLICE
SEATTLE POLICE
TAMPERE
SAN DIEGO COUNTY SHERIFF
MENDOCINO COUNTY SHERIFF
POLICE
Connemara
Reserved
PREMIUM IRISH COFFEE

Significant events

The Brazen Head is an important pub in Dublin due to the live music that is offered every night. It has now established itself as one of the Dublin's best live music venues. As it has been mentioned, the most important music event is the Sunday afternoon session, from 15:30 to 18:30, which allow people to sing or play their own songs in public. In this famous event, many famous musicians have played here over years such as Dubliners, Van Morrison, The Hothouse Flowers and more recently Tom Jones at the Guinness 250 year celebrations. The Brazen Head was also featured in Garth Brooks music video Name Song.
Every night there are new groups and events at the bar. There are traditional and contemporary bands that go to play their own songs. Some examples of recent events are Live Traditional Music Ballads with Scotty, Celtic Mist playing in the Lounge, Great traditional music from the Fireman, Rye River Band... Most of them act from 21:30 to 23:30 or 00:30.

Sometimes it is possible to assist to an important and known event called Evening of Food Folklore and Fairies that consists in an authentic and entertaining evening of Irish storytelling for a night out in Dublin. Irish life long ago stories are told to guests, gaining fascinating insights into the history of Ireland. It has been voted as the Number 1 Dinner Entertainment in Dublin on 'Trip Advisor' from 2011 to 2017. This event allows people to take the imagination back in time as they listen to the magical tales of Irish Folklore.
This event allows to understand Irish culture and Irish Landscape, appreciating them as you have never done.

Julia Catalan Hernandez
Product Visualisation
DIT

Assessment 2

CORDLESS DRILL

WORKING TOOL

The cordless drill is a working tool which is used to punch out materials by chip removal. The holes are made with the lockable part which is called drill. This part should be changed as well as the speed transmitted to the machine, depending on the material that is going to be bored. There are drills for metal, wood, plastic, concrete... The diameter of the drill is other parameter that can be changed depending on the dimensions of the hole to be made.

There are two different types of drills, the hand drill (wireless and portable) and the fixed one. The one shown is the cordless drill.

The design of the hand drill is made thinking on the user wellness and ergonomics. The central part is made to handle the drill in a secure way, avoiding slippage and making easier the management of the machine.

INFERIOR DETAIL

FRONTAL DETAIL

BACK DETAIL

Although the battery and the motor are included in the same object, this kind of drill is not heavy due to the materials that are used on its manufacturing. Most of them are plastics and include some metallic parts. These materials are applied to the different components which make up the general drills (sleeve chuck, torque clutch, speed regulator, forward and reverse switch, motor, ergonomic handle, battery).

The cordless electric drills are designed with a gun shape. In this kind of machines the motor is situated in the horizontal part, while the battery is inserted in the central-inferior part. With this design, the users hold the machine in the middle part between the motor and the battery and that feature offers different advantages:

1. It is provided a better balance and control of the tool.
2. The shape and the materials of the clamping area help to prevent it from slipping.
3. They can be used in reduced spaces.